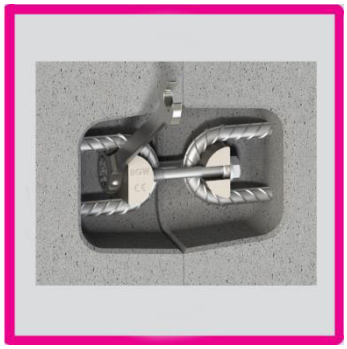

# BGW

bohr GmbH
GERMAN QUALITY
SINCE 1986

Build something great

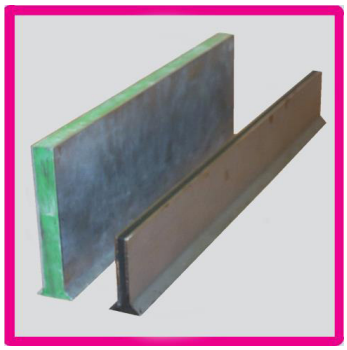

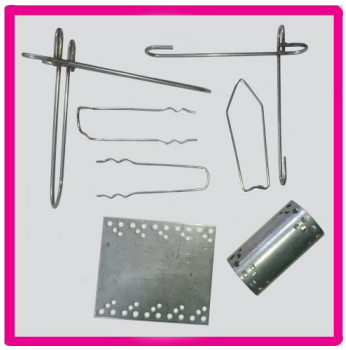

# BGW-Bohr GmbH
# Kastanienstr. 10
# 97854 Steinfeld

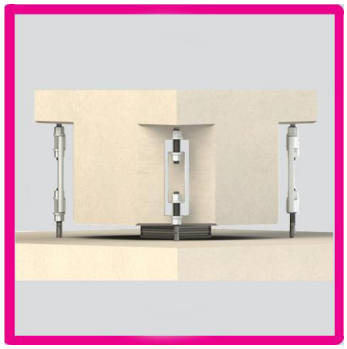

# BGW-magnetic holder type HM1

09/17 (04/01)

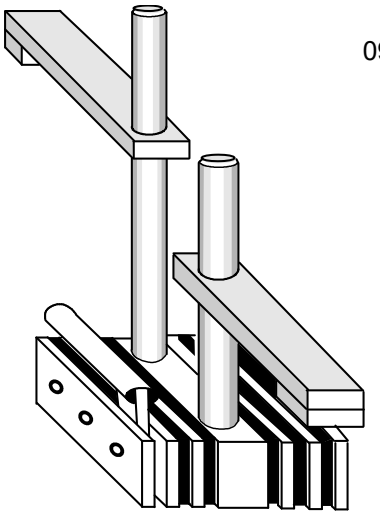

This magnetic holder system is by mean of it's steplessly adjustable downholder especially suitable for the use with often changing formwork height.

The arm is approximately 360° around the column moveable.

Three sides of our magnetic holders are flat and without screws jutting out, so that they can be used as stoppers against side-moving of the formwork. The structure of the magnet body adjusts unevenness of the formwork without loss of adhesion.

## BGW-magnetic holder type HM1

| Art.-no. | Holding down device | Adhesion ca. kp | Shifting power | Weight ca. kg | Width mm | Lengt h mm | Fixing height mm | Price €/pcs |
|---|---|---|---|---|---|---|---|---|
| HM1- 600-1A | 1 x mit Auflager | 600 | 200 | 11,0 | 102 | 250 | ca. 300 | 123,00 |
| HM1- 600-1G | 1 x mit Gewinde | 600 | 200 | 11,0 | 102 | 250 | ca. 300 | 123,00 |
| HM1- 600-2A | 2 x mit Auflager | 600 | 200 | 14,0 | 102 | 250 | ca. 300 | 135,00 |
| HM1- 600-2G | 2 x mit Gewinde | 600 | 200 | 14,0 | 102 | 250 | ca. 300 | 135,00 |
| HM1-1000-1A | 1 x mit Auflager | 1000 | 350 | 15,0 | 150 | 250 | ca. 300 | 162,00 |
| HM1-1000-1G | 1 x mit Gewinde | 1000 | 350 | 15,0 | 150 | 250 | ca. 300 | 162,00 |
| HM1-1000-2A | 2 x mit Auflager | 1000 | 350 | 18,0 | 150 | 250 | ca. 300 | 174,00 |
| HM1-1000-2G | 2 x mit Gewinde | 1000 | 350 | 18,0 | 150 | 250 | ca. 300 | 174,00 |
| HM1-1600-1A | 1 x mit Auflager | 1600 | 600 | 18,0 | 200 | 250 | ca. 300 | 194,00 |
| HM1-1600-1G | 1 x mit Gewinde | 1600 | 600 | 18,0 | 200 | 250 | ca. 300 | 194,00 |
| HM1-1600-2A | 2 x mit Auflager | 1600 | 600 | 21,0 | 200 | 250 | ca. 300 | 207,00 |
| HM1-1600-2G | 2 x mit Gewinde | 1600 | 600 | 21,0 | 200 | 250 | ca. 300 | 207,00 |
| HM1-2000-1A | 1 x mit Auflager | 2000 | 700 | 21,0 | 245 | 250 | ca. 300 | 225,00 |
| HM1-2000-1G | 1 x mit Gewinde | 2000 | 700 | 21,0 | 245 | 250 | ca. 300 | 225,00 |
| HM1-2000-2A | 2 x mit Auflager | 2000 | 700 | 24,0 | 245 | 250 | ca. 300 | 238,00 |
| HM1-2000-2G | 2 x mit Gewinde | 2000 | 700 | 24,0 | 245 | 250 | ca. 300 | 238,00 |

***special measurements, special for your production, you get on demand!***

## Supplies

Downholder with welded support, incl. Column

| Art.-no. | Description | Price €/pcs |
|---|---|---|
| NH-11 | Downholder with welded support<br>Pillar Ø 25 mm with thread M 24 | 13,00 |

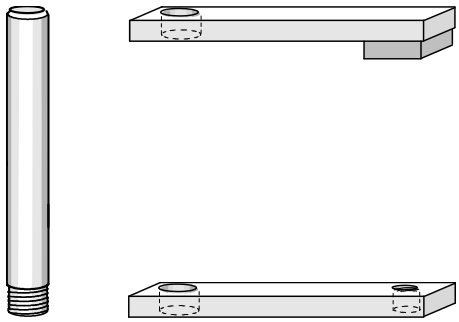

### Downholder with thread M 16, incl. pillar

| Art.-no. | Description | Price €/pcs |
|---|---|---|
| NH-21 | Downholder with thread M 16<br>Pillar Ø 25 mm with thread M 24 | 13,00 |

### Joint pressure spindle

| Art.-no.. | Description | Price €/pcs |
|---|---|---|
| ZG-1 | Joint pressure spindle M 16<br>Cross handle 80 mm,<br>Ø plate 32 mm | 15,00 |

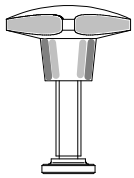

# BGW-magnetic holder type HM2

04/09(04/09)

This magnetic holder system is suitable to prevent a moving of the shuttering to the side. As the grab handle being situated in the middle of the magnet, an exact and easy fixing of the system is made possible.

## *BGW*-magnetic holder HM2 – standard –

**with central handle and side release lever**

| art.-no. | adhesion ca. kp | side-moving strength | weight ca. kg | width mm | length mm | height with release tool mm | height magnet mm | price €/piece |
|---|---|---|---|---|---|---|---|---|
| HM2- 600 | 600 | 200 | 6,0 | 92 | 250 | 120 | 50 | 98,00 |
| HM2-1000 | 1000 | 350 | 10,0 | 140 | 250 | 120 | 50 | 136,00 |
| HM2-1600 | 1600 | 600 | 14,0 | 190 | 250 | 120 | 50 | 169,00 |
| HM2-2000 | 2000 | 700 | 18,0 | 235 | 250 | 120 | 50 | 202,00 |

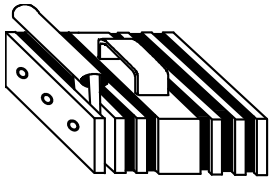

## *BGW*-magnetic holder HM2 – release tool concentric –

| art.-no. | adhesion ca. kp | side-moving strength | weight ca. kg | width mm | length mm | height with release tool mm | height magnet mm | price €/piece |
|---|---|---|---|---|---|---|---|---|
| HM2- 600-1 | 600 | 200 | 6,0 | 92 | 250 | 120 | 50 | 96,00 |
| HM2-1000-1 | 1000 | 350 | 10,0 | 140 | 250 | 120 | 50 | 134,00 |
| HM2-1600-1 | 1600 | 600 | 14,0 | 190 | 250 | 120 | 50 | 167,00 |
| HM2-2000-1 | 2000 | 700 | 18,0 | 235 | 250 | 120 | 50 | 200,00 |

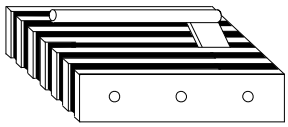

## *BGW*-magnetic holder HM2 – plate to base on –

**with release tool concentric and holes for nails on demand**

| art.-no. | adhesion ca. kp | side-moving strength | weight ca. kg | width mm | length mm | height with release tool mm | height magnet mm | price €/piece |
|---|---|---|---|---|---|---|---|---|
| HM2- 600-2 | 600 | 200 | 6,0 | 92 | 250 | 120 | 50 | 111,00 |
| HM2-1000-2 | 1000 | 350 | 10,0 | 140 | 250 | 120 | 50 | 149,00 |
| HM2-1600-2 | 1600 | 600 | 14,0 | 190 | 250 | 120 | 50 | 182,00 |
| HM2-2000-2 | 2000 | 700 | 18,0 | 235 | 250 | 120 | 50 | 215,00 |

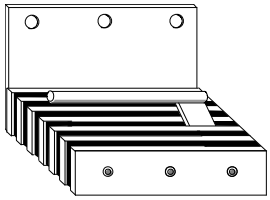

## *BGW*-magnetic holder HM2 – walded on bracket 90° –

**with concentric release tool and side release lever**

| art.-no. | adhesion ca. kp | side-moving strength | weight ca. kg | width mm | length mm | height with release tool mm | height magnet mm | price €/piece |
|---|---|---|---|---|---|---|---|---|
| HM2- 600-3 | 600 | 200 | 6,0 | 92 | 250 | 120 | 50 | 111,00 |
| HM2-1000-3 | 1000 | 350 | 10,0 | 140 | 250 | 120 | 50 | 149,00 |
| HM2-1600-3 | 1600 | 600 | 14,0 | 190 | 250 | 120 | 50 | 182,00 |
| HM2-2000-3 | 2000 | 700 | 18,0 | 235 | 250 | 120 | 50 | 215,00 |

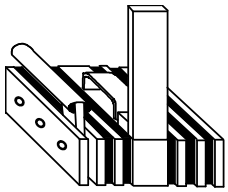

## *BGW*-magnetic holder HM2 – frontal walded on angle –

**with release tool concentric and welded on female screw on demand**

| art.-no. | adhesion ca. kp | side-moving strength | weight ca. kg | width mm | length mm | height with release tool mm | height magnet mm | price €/piece |
|---|---|---|---|---|---|---|---|---|
| HM2- 600-4 | 600 | 200 | 6,0 | 92 | 250 | 120 | 50 | 111,00 |
| HM2-1000-4 | 1000 | 350 | 10,0 | 140 | 250 | 120 | 50 | 149,00 |
| HM2-1600-4 | 1600 | 600 | 14,0 | 190 | 250 | 120 | 50 | 182,00 |
| HM2-2000-4 | 2000 | 700 | 18,0 | 235 | 250 | 120 | 50 | 215,00 |

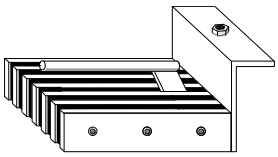

## *BGW*-magnetic holder HM2 – for fixing of window and door frames –

| art.-no. | modell with concentric... | adhesion ca. kp | side-moving strength | weight ca. kg | width mm | length mm | adhesion ca. kp | price €/piece |
|---|---|---|---|---|---|---|---|---|
| HM2-2000-R | ...ring-screw | 2000 | 700 | 18 | 235 | 250 | 50 | 210,00 |
| HM2-2000-D | ...D&W(15)–nut | 2000 | 700 | 18 | 235 | 250 | 50 | 210,00 |
| HM2-2000-G | ...thread M 20 | 2000 | 700 | 18 | 235 | 250 | 50 | 214,00 |

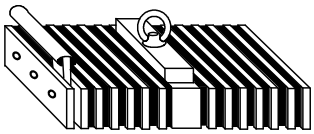

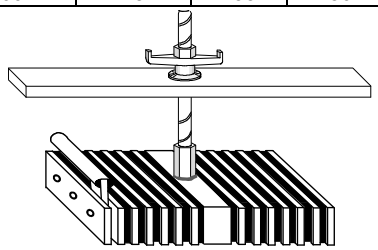

**Drop rod and wingnut separate available!**

# *BGW-magnetic holder type HM1-neodymium*



*BGW*-magnetic holder type HM1-neodymium is a further development of our reinforced *BGW*-magnetic holder type HM1. Compared to its predecessor, the rubber-bonded ferrite magnets were replaced by the sintered neodymium magnets. By using neodymium, HM1-Neodymium is smaller and lighter than its predecessor and has a uniform size. The screws of the magnetic body have been replaced by the secure rivet connection. The shielding and positioning of neodymium magnetic plates in the HM-1 magnetic body is performed by aluminum cage.

The magnetic body is completely smooth, so that at least 3 sides are suitable for working. BGW-HM1-Neodymium Magnets are equipped with external or internal release lever according to customer requirements. In the magnet body two holes M24 are inserted for screwing stable hold-down. The hold-downs function like a percussion clamp and fix the formwork at the switch table. The hold-downs are infinitely height-adjustable and can be rotated 360 °.

The adhesive force of the magnets is determined in our in-house test laboratory. Test certificates are available on request.

**HM1 with supports and external release lever**

**HM1-neodymium with pressure spindles and internal release lever**

***advantages***

- **smaller external dimensions**
- **lower weight**
- **uniform size**
- **adhesive force up to 4100 kp**
- **impact Resistant**
- **resistant to shocks**
- **at least 3 sides suitable for working**
- **outer or internal release lever**

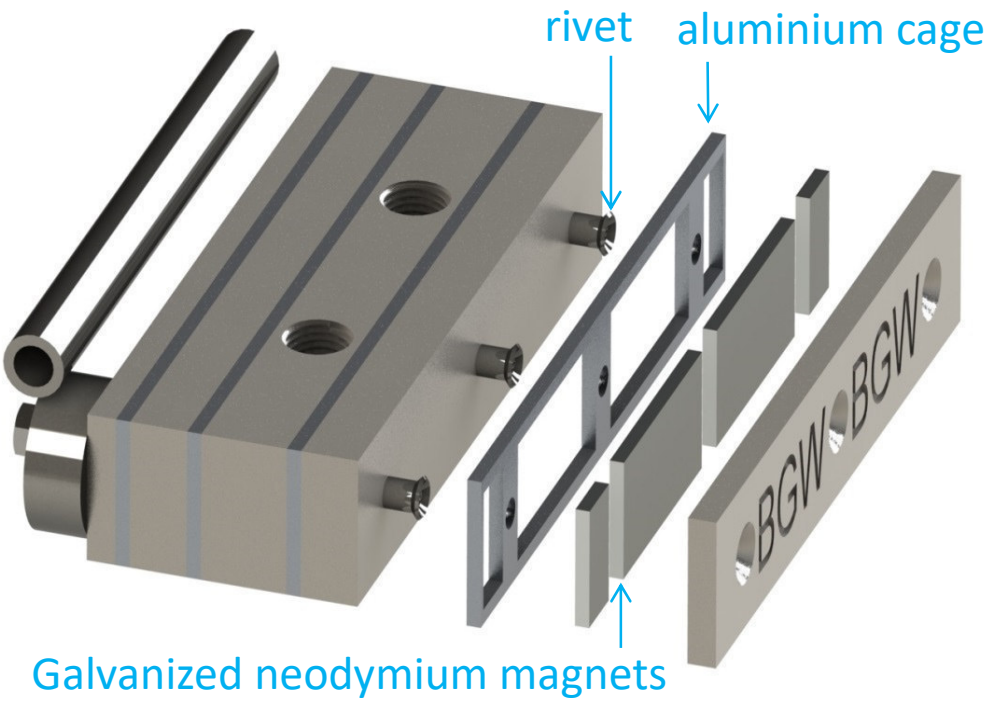


**HM1-neodymium with 1x supports**

| Art.-No. | adhesion ca. kp | release lever | length l [mm] | width b [mm] | height h [mm] | Fixing heigth [mm] | weight kg | price €/piece |
|---|---|---|---|---|---|---|---|---|
| HM1-4100-51Aa | 4100 | **outer** | 250 | 144 | 310 | 30-250 | 14,5 | 385,- |
| HM1-2500-51Aa | 2500 | **outer** | 250 | 144 | 310 | 30-250 | 13,5 | 275,- |
| HM1-2500-51Ai | 2500 | internal | 250 | 110 | 310 | 30-250 | 13,5 | 275,- |
| HM1-1500-51Aa | 1500 | **outer** | 250 | 144 | 310 | 30-250 | 13,5 | 220,- |
| HM1-1500-51Ai | 1500 | internal | 250 | 110 | 310 | 30-250 | 13,5 | 220,- |
| HM1-850-51Aa | 850 | **outer** | 250 | 144 | 310 | 30-250 | 12,5 | 170,- |
| HM1-850-51Ai | 850 | internal | 250 | 110 | 310 | 30-250 | 12,5 | 170,- |

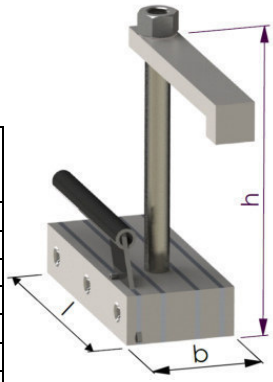

# *BGW-magnetic holder type HM1-neodymium*



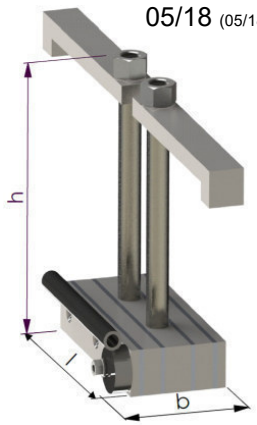


### HM1-neodymium with 2x supports

| Art.-No. | adhesion ca. kp | release lever | length l [mm] | width b [mm] | height h [mm] | Fixing heigth [mm] | weight kg | price €/piece |
|---|---|---|---|---|---|---|---|---|
| HM1-4100-52Aa | 4100 | **außen** | 250 | 144 | 310 | 30-250 | 18,0 | 390,- |
| HM1-2500-52Aa | 2500 | **außen** | 250 | 144 | 310 | 30-250 | 17,0 | 280,- |
| HM1-2500-52Ai | 2500 | innen | 250 | 110 | 310 | 30-250 | 17,0 | 280,- |
| HM1-1500-52Aa | 1500 | **außen** | 250 | 144 | 310 | 30-250 | 17,0 | 230,- |
| HM1-1500-52Ai | 1500 | innen | 250 | 110 | 310 | 30-250 | 17,0 | 230,- |
| HM1-850-52Aa | 850 | **außen** | 250 | 144 | 310 | 30-250 | 16,0 | 180,- |
| HM1-850-52Ai | 850 | innen | 250 | 110 | 310 | 30-250 | 16,0 | 180,- |

### HM1-neodymium with 1x clamping spindle

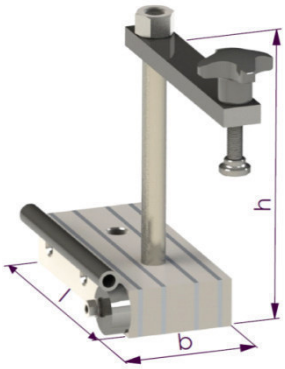


| Art.-No. | adhesion ca. kp | Release lever | length l [mm] | width b [mm] | heigth h [mm] | Fixing heigth [mm] | weight kg | price €/piece |
|---|---|---|---|---|---|---|---|---|
| HM1-4100-51Ga | 4100 | **außen** | 250 | 144 | 340 | 35-255 | 14,5 | 390,- |
| HM1-2500-51Ga | 2500 | **außen** | 250 | 144 | 340 | 35-255 | 13,5 | 280,- |
| HM1-2500-51Gi | 2500 | innen | 250 | 110 | 340 | 35-255 | 13,5 | 280,- |
| HM1-1500-51Ga | 1500 | **außen** | 250 | 144 | 340 | 35-255 | 13,5 | 230,- |
| HM1-1500-51Gi | 1500 | innen | 250 | 110 | 340 | 35-255 | 13,5 | 230,- |
| HM1-850-51Ga | 850 | **außen** | 250 | 144 | 340 | 35-255 | 12,5 | 175,- |
| HM1-850-51Gi | 850 | innen | 250 | 110 | 340 | 35-255 | 12,5 | 175,- |

### HM1-neodymium with 2x clamping spindle

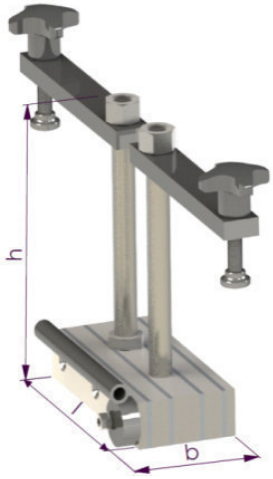


| Art.-No. | adhesion ca. kp | Release lever | length l [mm] | width b [mm] | heigth h [mm] | Fixing heigth [mm] | weight kg | price €/piece |
|---|---|---|---|---|---|---|---|---|
| HM1-4100-52Ga | 4100 | **außen** | 250 | 144 | 340 | 35-255 | 18,0 | 405,- |
| HM1-2500-52Ga | 2500 | **außen** | 250 | 144 | 340 | 35-255 | 17,0 | 290,- |
| HM1-2500-52Gi | 2500 | innen | 250 | 110 | 340 | 35-255 | 17,0 | 290,- |
| HM1-1500-52Ga | 1500 | **außen** | 250 | 144 | 340 | 35-255 | 17,0 | 240,- |
| HM1-1500-52Gi | 1500 | innen | 250 | 110 | 340 | 35-255 | 17,0 | 240,- |
| HM1-850-52Ga | 850 | **außen** | 250 | 144 | 340 | 35-255 | 16,0 | 190,- |
| HM1-850-52Gi | 850 | innen | 250 | 110 | 340 | 35-255 | 16,0 | 190,- |

### BGW- release lever extension

| Art.-No. | length l [mm] | outside Ø b [mm] | weight kg | price €/piece |
|---|---|---|---|---|
| 56127 | 300 | 26,9 | 0,366 | 10,00 |

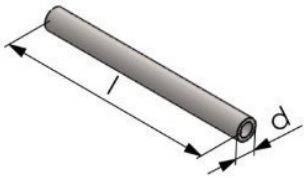


## BGW hold-down column with distance fuse

On customer request, the hold-down column can be equipped with a distance safety device. Due to this protection it is possible to stop the HM1 on the formwork before placing it completely in order to set the final position of the holding magnet precisely and without hammering.

| Art.-No. | length l [mm] | width b [mm] | heigth h [mm] | weight kg | price €/piece |
|---|---|---|---|---|---|
| NH31 | 300 | 42 | 86 | 1,2 | 25,00 |

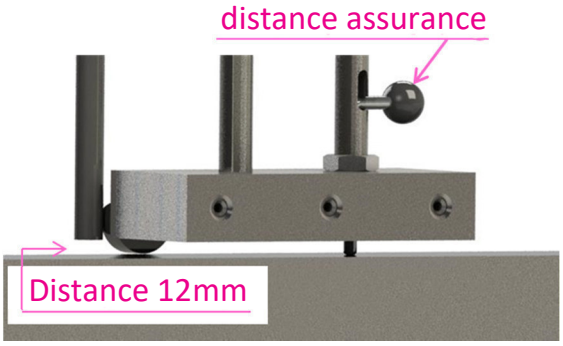

# *BGW-magnetic holder type HM2-neodymium*

04/18 (04/18)

*BGW*-magnetic holder type HM2-neodymium is a further development of our reinforced *BGW*-magnetic holder type HM1. Compared to its predecessor, the rubber-bonded ferrite magnets were replaced by the sintered neodymium magnets. By using neodymium, HM2 neodymium is smaller and lighter than its predecessor and has a uniform size. The screws of the magnetic body have been replaced by the secure rivet connection. The shielding and positioning of neodymium magnetic plates in the HM-2 magnetic body is performed by aluminum plates.

The magnetic body is completely smooth, so that at least 3 sides are suitable for working. BGW-HM2-Neodymium magnets are equipped according to customer requirements with outside or with internal release lever.

The adhesive force of the magnets is determined in our in-house test laboratory. Test certificates are available on request.

***Advantages***

- **smaller external dimensions**
- **lower weight**
- **uniform size**
- **adhesive force up to 4100 kp**
- **impact Resistant**
- **resistant to shocks**
- **at least 3 side suitable for working**
- **outer or internal release lever**

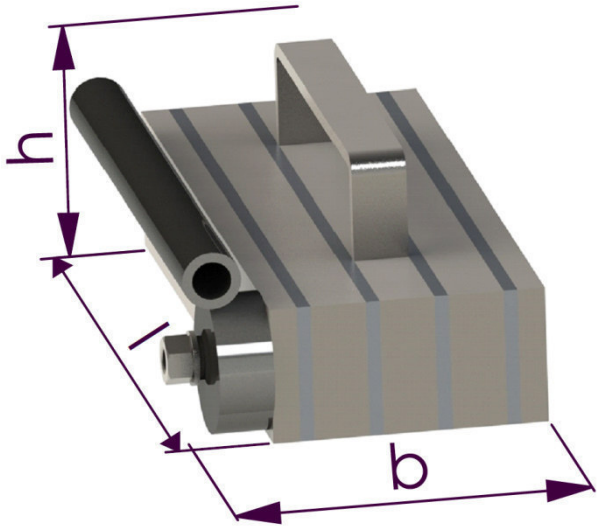


**HM2-neodymium with outer release lever**

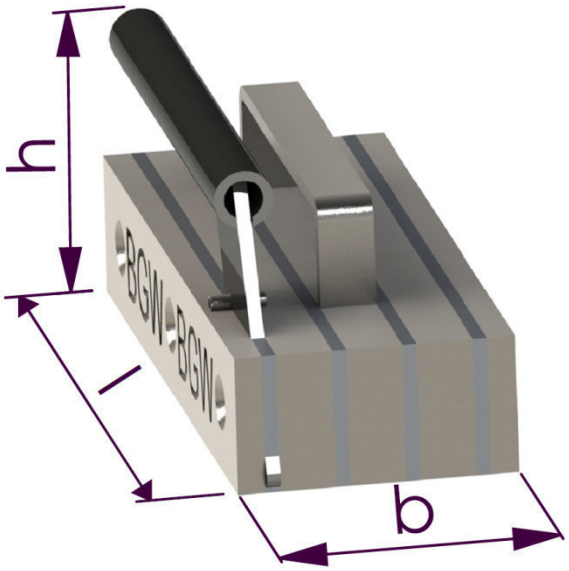


**HM2-neodymium with internal release lever**

**HM2-neodymium**

| Art.-No. | adhesion ca. kp | release lever | length l [mm] | width b [mm] | height h [mm] | weight kg | price €/piece |
|---|---|---|---|---|---|---|---|
| HM2-4100-5a | 4100 | **outside** | 250 | 134 | 89 | 11 | 400,- |
| HM2-2500-5a | 2500 | **outside** | 250 | 134 | 89 | 10 | 288,- |
| HM2-2500-5i | 2500 | inside | 250 | 100 | 106 | 10 | 288,- |
| HM2-1500-5a | 1500 | **outside** | 250 | 134 | 89 | 10 | 233,- |
| HM2-1500-5i | 1500 | inside | 250 | 100 | 106 | 10 | 233,- |
| HM2-850-5a | 850 | **outside** | 250 | 134 | 89 | 9 | 180,- |
| HM2-850-5i | 850 | inside | 250 | 100 | 106 | 9 | 180,- |

**BGW- release lever extension**

| Art.-No. | length l [mm] | outside Ø b [mm] | weight kg | price €/piece |
|---|---|---|---|---|
| 56127 | 300 | 26,9 | 0,366 | 10,- |

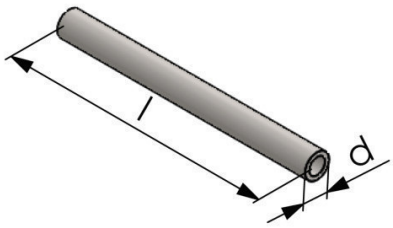

# BGW-magnetic holder type HM3

06/14(07/06)

This magnetic holder system is suitable fort he installation in U-profiles, which are used at the production of element-ceilings..

On demand, this magnetic holder is delivered fort he installation in U-profiles with a incline of 5 x 45°, with other milled gaps or robot suitablility.

The magnetic holders are not screwed, but Riveted with stainless steel flat tot he surface.

So that the magnet always with the appropriate side mount and by adjust these do not damaged, only the detention side is milled.

The U-profiles matching to this magnet system, you get on demand with draft.

## HM3 bare
## ferrite neodymium

| art.-no. HM3- | adhesion ca. kp | shift power | weight ca. kg | width mm | length mm | height mm | price €/piece |
|---|---|---|---|---|---|---|---|
| 32-140-2 | 200 | 70 | 1,5 | 32 | 140 | 50 | 25,56 |
| 40-140-2 | 200 | 70 | 1,5 | 40 | 140 | 50 | 25,56 |
| 50-140-2 | 700 | 250 | 2,5 | 50 | 140 | 50 | 90,00 |
| 50-140-3 | 300 | 100 | 2,0 | 50 | 140 | 50 | 27,61 |
| 54-140-2 | 700 | 250 | 2,5 | 54 | 140 | 50 | 92,00 |
| 54-140-3 | 300 | 100 | 2,0 | 54 | 140 | 50 | 28,12 |
| 54-140-4 | 450 | 150 | 2,5 | 54 | 140 | 50 | 32,72 |
| 32-250-2 | 350 | 120 | 3,0 | 32 | 250 | 50 | 35,79 |
| 40-250-2 | 350 | 120 | 3,0 | 40 | 250 | 50 | 35,79 |
| 50-250-2 | 1100 | 385 | 4,0 | 50 | 250 | 50 | 120,00 |
| 50-250-2 | 1400 | 500 | 4,0 | 50 | 250 | 50 | 135,00 |
| 50-250-3 | 500 | 190 | 4,0 | 50 | 250 | 50 | 37,84 |
| 54-250-2 | 1100 | 385 | 4,0 | 54 | 250 | 50 | 120,00 |
| 54-250-2 | 1400 | 500 | 4,0 | 54 | 250 | 50 | 135,00 |
| 54-250-3 | 500 | 190 | 4,0 | 54 | 250 | 50 | 38,35 |
| 54-250-4 | 650 | 220 | 4,5 | 54 | 250 | 50 | 43,46 |

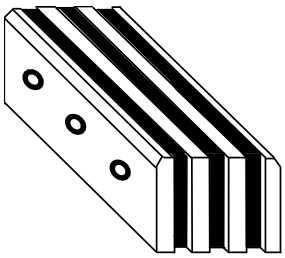

**HM3 galvanized on request!**

### Special Models:

HM3 with angle for roof slats

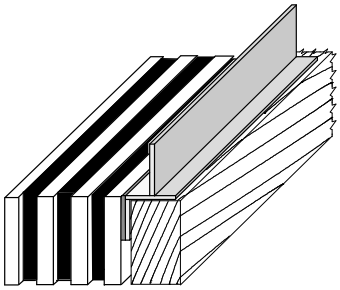

HM3 with stainless steel nuts on both sides

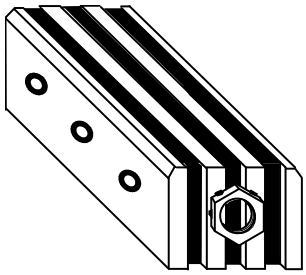

HM3 with stainless steel plates on gable-ends

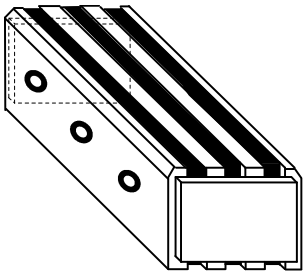

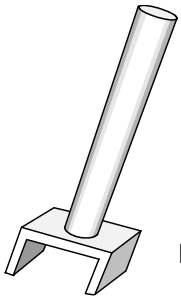

Key 44,00 €/piece

# *BGW-U-profiles for ceiling plates- and double wall production* 03/18(05/18)

Available in different models, according to the needed field of application. You can also get profiles at special heights on request. These consists of two parts, which are unbreakable welded together.

## U-Profile, edged, uncouth

| Art.-No. | Chamfers 10x45° | Weight kg/m | Width inside b mm | Height h mm | Wall. d mm | Fase r | For Magnet HM3 | Price €/stk |
|---|---|---|---|---|---|---|---|---|
| 3502 | without | 3,46 | 32 + 0,5 | 60 | 3u | 10 x 45° | 32-140-2<br>32-250-2 | Price on request |
| 3504 | Without | 4,61 | | | 4 | | | |
| 3506 | one-sided | 3,55 | | | 3 | | | |
| 3508 | one-sided | 4,73 | | | 4 | | | |
| 3510 | both-sided | 3,59 | | | 3 | | | |
| 3512 | both-sided | 4,79 | | | 4 | | | |
| 3514 | without | 3,64 | 40 + 0,5 | | 3 | | 40-140-2<br>40-250-2 | |
| 3516 | without | 4,85 | | | 4 | | | |
| 3518 | one-sided | 3,73 | | | 3 | | | |
| 3520 | one-sided | 4,98 | | | 4 | | | |
| 3522 | both-sided | 3,77 | | | 3 | | | |
| 3524 | both-sided | 5,03 | | | 4 | | | |
| 3526 | without | 3,87 | 50 + 0,5 | | 3 | | 50-140-3<br>50-250-3 | |
| 3528 | without | 5,15 | | | 4 | | | |
| 3530 | one-sided | 3,96 | | | 3 | | | |
| 3534 | one-sided | 5,28 | | | 4 | | | |
| 3536 | both-sided | 4,00 | | | 3 | | | |
| 3538 | both-sided | 5,33 | | | 4 | | | |
| 3540 | without | 3,96 | 54 + 0,5 | | 3 | | 54-140-3<br>54-250-3<br>54-140-4<br>54-250-4 | |
| 3542 | without | 5,28 | | | 4 | | | |
| 3544 | one-sided | 4,05 | | | 3 | | | |
| 3546 | one-sided | 5,40 | | | 4 | | | |
| 3548 | both-sided | 4,09 | | | 3 | | | |
| 3550 | both-sided | 5,45 | | | 4 | | | |
| 3552 | without | 3,68 | 32 + 0,5 | 65 | 3 | | 32-140-2<br>32-250-2 | |
| 3554 | without | 4,91 | | | 4 | | | |
| 3556 | one-sided | 3,78 | | | 3 | | | |
| 3558 | one-sided | 5,04 | | | 4 | | | |
| 3560 | both-sided | 3,82 | | | 3 | | | |
| 3562 | both-sided | 5,09 | | | 4 | | | |
| 3564 | without | 3,87 | 40 + 0,5 | | 3 | | 40-140-2<br>40-250-2 | |
| 3566 | without | 5,15 | | | 4 | | | |
| 3568 | one-sided | 3,96 | | | 3 | | | |
| 3570 | one-sided | 5,28 | | | 4 | | | |
| 3572 | both-sided | 4,00 | | | 3 | | | |
| 3574 | both-sided | 5,33 | | | 4 | | | |
| 3576 | without | 4,09 | 50 + 0,5 | | 3 | | 50-140-3<br>50-250-3 | |
| 3578 | without | 5,46 | | | 4 | | | |
| 3580 | one-sided | 4,19 | | | 3 | | | |
| 3582 | one-sided | 5,58 | | | 4 | | | |
| 3584 | both-sided | 4,23 | | | 3 | | | |
| 3586 | both-sided | 5,64 | | | 4 | | | |
| 3588 | without | 4,18 | 54 + 0,5 | | 3 | | 54-140-3<br>54-250-3<br>54-140-4<br>54-250-4 | |
| 3590 | without | 5,58 | | | 4 | | | |
| 3592 | one-sided | 4,28 | | | 3 | | | |
| 3594 | one-sided | 5,70 | | | 4 | | | |
| 3596 | both-sided | 4,32 | | | 3 | | | |
| 3598 | both-sided | 5,76 | | | 4 | | | |
| 3600 | without | 3,91 | 32 + 0,5 | 70 | 3 | | 32-140-2<br>32-250-2 | |
| 3602 | without | 5,22 | | | 4 | | | |
| 3604 | one-sided | 4,01 | | | 3 | | | |
| 3606 | one-sided | 5,34 | | | 4 | | | |
| 3608 | both-sided | 4,05 | | | 3 | | | |
| 3610 | both-sided | 5,39 | | | 4 | | | |
| 3612 | without | 4,09 | 40 + 0,5 | | 3 | | 40-140-2<br>40-250-2 | |
| 3614 | without | 5,46 | | | 4 | | | |
| 3616 | one-sided | 4,19 | | | 3 | | | |
| 3618 | one-sided | 5,58 | | | 4 | | | |
| 3620 | both-sided | 4,23 | | | 3 | | | |
| 3622 | both-sided | 5,64 | | | 4 | | | |
| 3624 | without | 4,32 | 50 + 0,5 | | 3 | | 50-140-3<br>50-250-3 | |
| 3626 | without | 5,76 | | | 4 | | | |
| 3628 | one-sided | 4,41 | | | 3 | | | |
| 3630 | one-sided | 5,89 | | | 4 | | | |
| 3632 | both-sided | 4,45 | | | 3 | | | |
| 3634 | both-sided | 5,94 | | | 4 | | | |
| 3636 | without | 4,41 | 54 + 0,5 | | 3 | | 54-140-3<br>54-250-3<br>54-140-4<br>54-250-4 | |
| 3638 | without | 5,88 | | | 4 | | | |
| 3640 | one-sided | 4,51 | | | 3 | | | |
| 3642 | one-sided | 6,01 | | | 4 | | | |
| 3644 | both-sided | 4,55 | | | 3 | | | |
| 3646 | both-sided | 6,06 | | | 4 | | | |

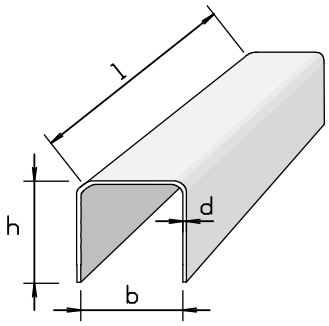


without chamfers

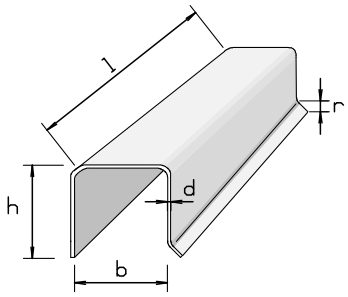


one-sided chamfers

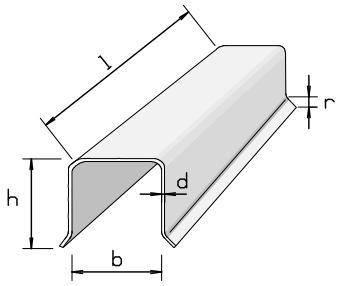


both-sided chamfers

# *BGW-U-profiles for ceiling plates- and double wall production* 03/18(05/18)

Available in different models, according to the needed field of application. The advantage of the planed model is, that no concrete can get into the profile.You can also get profiles at special heights on request. These consists of two parts, which are unbreakable welded together.

**U-Profile, edged and planed**

| Art.-No. | Chamfers 10x45° | Weight kg/m | Width inside b mm | Height h mm | Wall. d mm | Fase r | For Magnet HM3 | Price €/stk |
|---|---|---|---|---|---|---|---|---|
| 3502G | without | 3,46 | 32 + 0,5 | 60 | 3 | 10 x 45° | 32-140-2<br>32-250-2 | Price on request |
| 3504G | without | 4,61 | | | 4 | | | |
| 3506G | one-sided | 3,55 | | | 3 | | | |
| 3508G | one-sided | 4,73 | | | 4 | | | |
| 3510G | both-sided | 3,59 | | | 3 | | | |
| 3512G | both-sided | 4,79 | | | 4 | | | |
| 3514G | without | 3,64 | 40 + 0,5 | | 3 | | 40-140-2<br>40-250-2 | |
| 3516G | without | 4,85 | | | 4 | | | |
| 3518G | one-sided | 3,73 | | | 3 | | | |
| 3520G | one-sided | 4,98 | | | 4 | | | |
| 3522G | both-sided | 3,77 | | | 3 | | | |
| 3524G | both-sided | 5,03 | | | 4 | | | |
| 3526G | without | 3,87 | 50 + 0,5 | | 3 | | 50-140-3<br>50-250-3 | |
| 3528G | without | 5,15 | | | 4 | | | |
| 3530G | one-sided | 3,96 | | | 3 | | | |
| 3534G | one-sided | 5,28 | | | 4 | | | |
| 3536G | both-sided | 4,00 | | | 3 | | | |
| 3538G | both-sided | 5,33 | | | 4 | | | |
| 3540G | without | 3,96 | 54 + 0,5 | | 3 | | 54-140-3<br>54-250-3<br>54-140-4<br>54-250-4 | |
| 3542G | without | 5,28 | | | 4 | | | |
| 3544G | one-sided | 4,05 | | | 3 | | | |
| 3546G | one-sided | 5,40 | | | 4 | | | |
| 3548G | both-sided | 4,09 | | | 3 | | | |
| 3550G | both-sided | 5,45 | | | 4 | | | |
| 3552G | without | 3,68 | 32 + 0,5 | 65 | 3 | | 32-140-2<br>32-250-2 | |
| 3554G | without | 4,91 | | | 4 | | | |
| 3556G | one-sided | 3,78 | | | 3 | | | |
| 3558G | one-sided | 5,04 | | | 4 | | | |
| 3560G | both-sided | 3,82 | | | 3 | | | |
| 3562G | both-sided | 5,09 | | | 4 | | | |
| 3564G | without | 3,87 | 40 + 0,5 | | 3 | | 40-140-2<br>40-250-2 | |
| 3566G | without | 5,15 | | | 4 | | | |
| 3568G | one-sided | 3,96 | | | 3 | | | |
| 3570G | one-sided | 5,28 | | | 4 | | | |
| 3572G | both-sided | 4,00 | | | 3 | | | |
| 3574G | both-sided | 5,33 | | | 4 | | | |
| 3576G | without | 4,09 | 50 + 0,5 | | 3 | | 50-140-3<br>50-250-3 | |
| 3578G | without | 5,46 | | | 4 | | | |
| 3580G | one-sided | 4,19 | | | 3 | | | |
| 3582G | one-sided | 5,58 | | | 4 | | | |
| 3584G | both-sided | 4,23 | | | 3 | | | |
| 3586G | both-sided | 5,64 | | | 4 | | | |
| 3588G | without | 4,18 | 54 + 0,5 | | 3 | | 54-140-3<br>54-250-3<br>54-140-4<br>54-250-4 | |
| 3590G | without | 5,58 | | | 4 | | | |
| 3592G | one-sided | 4,28 | | | 3 | | | |
| 3594G | one-sided | 5,70 | | | 4 | | | |
| 3596G | both-sided | 4,32 | | | 3 | | | |
| 3598G | both-sided | 5,76 | | | 4 | | | |
| 3600G | without | 3,91 | 32 + 0,5 | 70 | 3 | | 32-140-2<br>32-250-2 | |
| 3602G | without | 5,22 | | | 4 | | | |
| 3604G | one-sided | 4,01 | | | 3 | | | |
| 3606G | one-sided | 5,34 | | | 4 | | | |
| 3608G | both-sided | 4,05 | | | 3 | | | |
| 3610G | both-sided | 5,39 | | | 4 | | | |
| 3612G | without | 4,09 | 40 + 0,5 | | 3 | | 40-140-2<br>40-250-2 | |
| 3614G | without | 5,46 | | | 4 | | | |
| 3616G | one-sided | 4,19 | | | 3 | | | |
| 3618G | one-sided | 5,58 | | | 4 | | | |
| 3620G | both-sided | 4,23 | | | 3 | | | |
| 3622G | both-sided | 5,64 | | | 4 | | | |
| 3624G | without | 4,32 | 50 + 0,5 | | 3 | | 50-140-3<br>50-250-3 | |
| 3626G | without | 5,76 | | | 4 | | | |
| 3628G | one-sided | 4,41 | | | 3 | | | |
| 3630G | one-sided | 5,89 | | | 4 | | | |
| 3632G | both-sided | 4,45 | | | 3 | | | |
| 3634G | both-sided | 5,94 | | | 4 | | | |
| 3636G | without | 4,41 | 54 + 0,5 | | 3 | | 54-140-3<br>54-250-3<br>54-140-4<br>54-250-4 | |
| 3638G | without | 5,88 | | | 4 | | | |
| 3640G | one-sided | 4,51 | | | 3 | | | |
| 3642G | one-sided | 6,01 | | | 4 | | | |
| 3644G | both-sided | 4,55 | | | 3 | | | |
| 3646G | both-sided | 6,06 | | | 4 | | | |

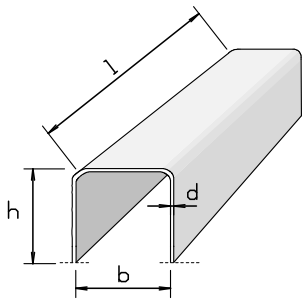


without chamfers

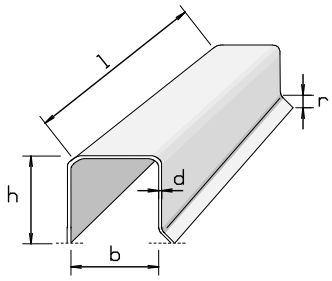


one-sided chamfers

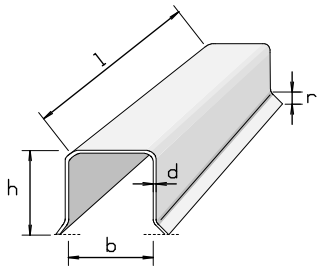


both-sided chamfers

# BGW-U-Profile in special heights

03/18(05/18)

The BGW shuttering profiles are available in various designs depending on the application. The planed version has the advantage that production-related unevennesses are eliminated on the support surface, and so no concrete can enter the profile. Chamfered profiles have the advantage of facilitating descaling and preventing the appearance of brittle corners on precast concrete elements. All cutters are available without, with one-side or both-side chamfer.

If desired, cross braces can be inserted into the profiles to achieve the necessary rigidity.

***BGW*-U-Profile in special heights**

| Art.-No. | Width inside b mm | Height h mm | Wandst. d mm | chamfers r | for Magnet HM3- | Price €/pcs |
|---|---|---|---|---|---|---|
| | 32 + 0,5 | 85 | 3 | 10 x 45° | 32-140-2 | Price on request |
| | | | 4 | | 32-250-2 | |
| | 40 + 0,5 | | 3 | | 40-140-2 | |
| | | | 4 | | 40-250-2 | |
| | 50 + 0,5 | | 3 | | 50-140-3 | |
| | | | 4 | | 50-250-3 | |
| | 54 + 0,5 | | 3 | | 54-140-3, 54-250-3 | |
| | | | 4 | | 54-140-4, 54-250-4 | |
| | 32 + 0,5 | 100 | 3 | | 32-140-2 | |
| | | | 4 | | 32-250-2 | |
| | 40 + 0,5 | | 3 | | 40-140-2 | |
| | | | 4 | | 40-250-2 | |
| | 50 + 0,5 | | 3 | | 50-140-3 | |
| | | | 4 | | 50-250-3 | |
| | 54 + 0,5 | | 3 | | 54-140-3, 54-250-3 | |
| | | | 4 | | 54-140-4, 54-250-4 | |
| | 32 + 0,5 | 150 | 3 | | 32-140-2 | |
| | | | 4 | | 32-250-2 | |
| | 40 + 0,5 | | 3 | | 40-140-2 | |
| | | | 4 | | 40-250-2 | |
| | 50 + 0,5 | | 3 | | 50-140-3 | |
| | | | 4 | | 50-250-3 | |
| | 54 + 0,5 | | 3 | | 54-140-3, 54-250-3 | |
| | | | 4 | | 54-140-4, 54-250-4 | |
| | 32 + 0,5 | 200 | 3 | | 32-140-2 | |
| | | | 4 | | 32-250-2 | |
| | 40 + 0,5 | | 3 | | 40-140-2 | |
| | | | 4 | | 40-250-2 | |
| | 50 + 0,5 | | 3 | | 50-140-3 | |
| | | | 4 | | 50-250-3 | |
| | 54 + 0,5 | | 3 | | 54-140-3, 54-250-3 | |
| | | | 4 | | 54-140-4, 54-250-4 | |

*Profiles in different heights and dimensions are available on request.*

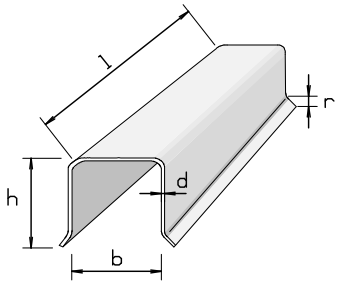


# BGW shutter profile sharp-edged

With the sharp-edged BGW shuttering profile, it is possible to fill concrete up to the upper edge of the shuttering profile without disturbing the bending radius and to make the concrete surface level. Alternatively, a triangular strip can be attached to the formwork edge. Profile length up to max. 4 meters.

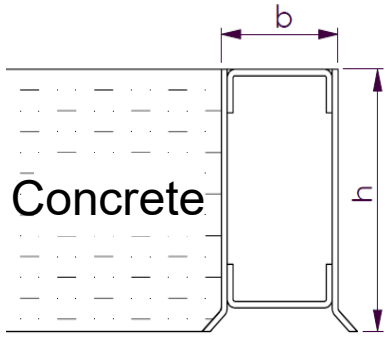


| Art.-No. | Width b [mm] | Height h [mm] | Price €/Meter |
|---|---|---|---|
| 3640-120G-2F | 60 | 120 | 52,10 |

# BGW shuttering profile for Traunsteiner silo

This BGW shuttering profile allows to produce concrete walls with rounded corners. Concrete walls with rounded corners will not damage the tarpaulins, leaving them longer in use.Profile length up to max. 4 meters. Profiles are folded from one piece and planed flat.

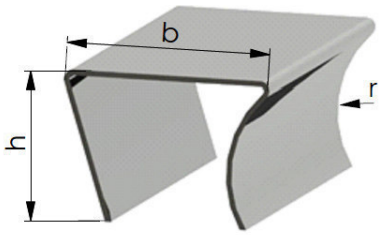


**BGW-shuttering profile for Traunsteiner Fahrsilo**

| Art.-No. | Width b [mm] | Height h [mm] | Curve r [mm] | Price €/pcs |
|---|---|---|---|---|
| 3655 | 112 | 80 | 56 | 60,00 |

# Corner 90° suitable for U-Profiles – height 60 mm 02/01(05/01)

encasing of:
- doors
- windows
- breakthroughs
- etc.

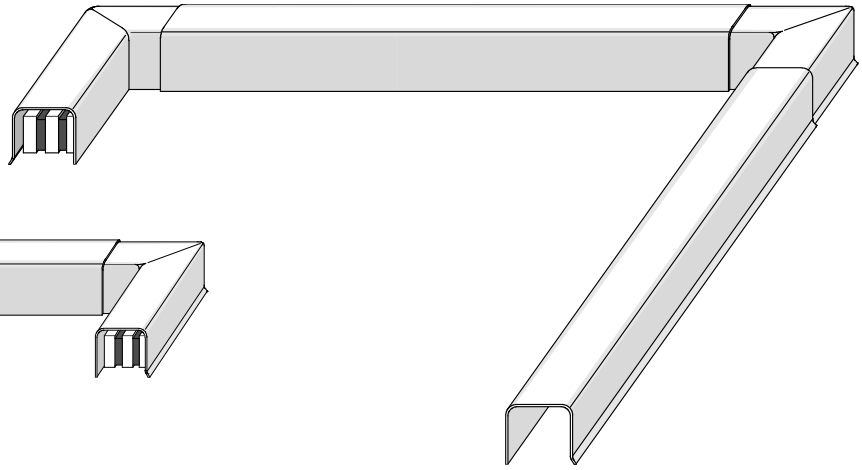

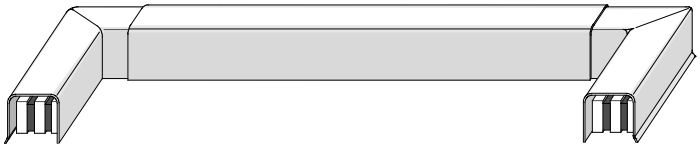

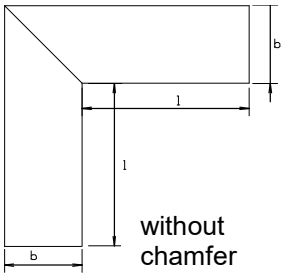


without chamfer

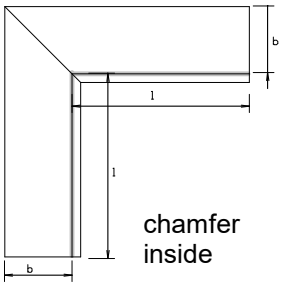


chamfer inside

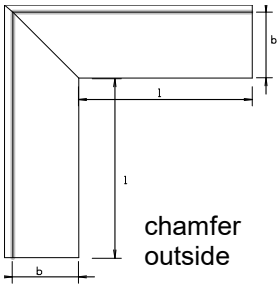


chamfer outside

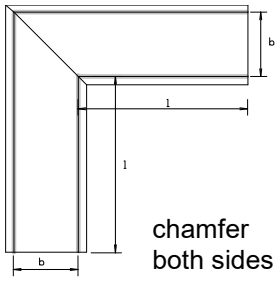


chamfer both sides

| art.-no. | chamfer 10 x 45° | side lenght- l mm | width inside b mm | height h mm | wall thickness d mm | for magnetic holder HM3- | price €/piece |
|---|---|---|---|---|---|---|---|
| 35000 | without | 150 | 32 + 0,5 | 60 | 3 | 32-140-2<br>32-250-2 | 46,02 |
| 35001 | without | 150 | 32 + 0,5 | 60 | 4 | | 46,02 |
| 35002 | inside | 150 | 32 + 0,5 | 60 | 3 | | 46,02 |
| 35003 | inside | 150 | 32 + 0,5 | 60 | 4 | | 46,02 |
| 35004 | outside | 150 | 32 + 0,5 | 60 | 3 | | 46,02 |
| 35005 | outside | 150 | 32 + 0,5 | 60 | 4 | | 46,02 |
| 35006 | both sides | 150 | 32 + 0,5 | 60 | 3 | | 46,02 |
| 35007 | both sides | 150 | 32 + 0,5 | 60 | 4 | | 46,02 |
| 35008 | without | 150 | 40 + 0,5 | 60 | 3 | 40-140-2<br>40-250-2 | 46,02 |
| 35009 | without | 150 | 40 + 0,5 | 60 | 4 | | 46,02 |
| 35010 | inside | 150 | 40 + 0,5 | 60 | 3 | | 46,02 |
| 35011 | inside | 150 | 40 + 0,5 | 60 | 4 | | 46,02 |
| 35012 | outside | 150 | 40 + 0,5 | 60 | 3 | | 46,02 |
| 35013 | outside | 150 | 40 + 0,5 | 60 | 4 | | 46,02 |
| 35014 | both sides | 150 | 40 + 0,5 | 60 | 3 | | 46,02 |
| 35015 | both sides | 150 | 40 + 0,5 | 60 | 4 | | 46,02 |
| 35016 | without | 150 | 50 + 0,5 | 60 | 3 | 50-140-3<br>50-250-3 | 46,02 |
| 35017 | without | 150 | 50 + 0,5 | 60 | 4 | | 46,02 |
| 35018 | inside | 150 | 50 + 0,5 | 60 | 3 | | 46,02 |
| 35019 | inside | 150 | 50 + 0,5 | 60 | 4 | | 46,02 |
| 35020 | outside | 150 | 50 + 0,5 | 60 | 3 | | 46,02 |
| 35021 | outside | 150 | 50 + 0,5 | 60 | 4 | | 46,02 |
| 35022 | both sides | 150 | 50 + 0,5 | 60 | 3 | | 46,02 |
| 35023 | both sides | 150 | 50 + 0,5 | 60 | 4 | | 46,02 |
| 35024 | without | 150 | 54 + 0,5 | 60 | 3 | 54-140-3<br>54-250-3<br>54-140-4<br>54-250-4 | 46,02 |
| 35025 | without | 150 | 54 + 0,5 | 60 | 4 | | 46,02 |
| 35026 | inside | 150 | 54 + 0,5 | 60 | 3 | | 46,02 |
| 35027 | inside | 150 | 54 + 0,5 | 60 | 4 | | 46,02 |
| 35028 | outside | 150 | 54 + 0,5 | 60 | 3 | | 46,02 |
| 35029 | outside | 150 | 54 + 0,5 | 60 | 4 | | 46,02 |
| 35030 | both sides | 150 | 54 + 0,5 | 60 | 3 | | 46,02 |
| 35031 | both sides | 150 | 54 + 0,5 | 60 | 4 | | 46,02 |

**Heights 65 and 70 mm see next side! Further dimensions are available on request!**

# Corner 90° suitable for U-Profiles - heights 65 and 70 mm 02/01(05/01)

encasing of:
- doors
- windows
- breakthroughs

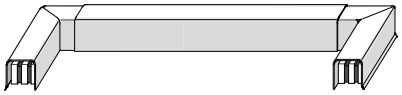

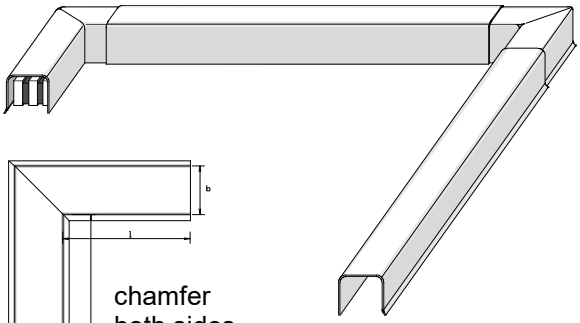

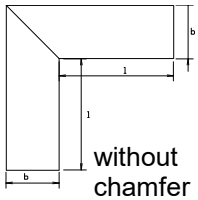


without chamfer

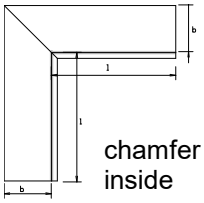


chamfer inside

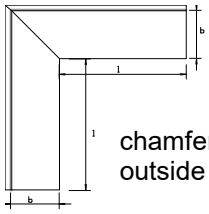


chamfer outside

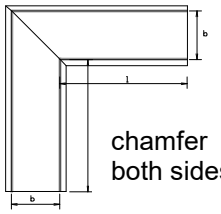


chamfer both sides

| art.-no. | chamfer 10 x 45° | side length- l mm | width inside b mm | height h mm | wall thickness d mm | for magnetic holder HM3- | price €/piece |
|---|---|---|---|---|---|---|---|
| 35032 | without | 150 | 32 + 0,5 | 65 | 3 | 32-140-2<br>32-250-2 | 46,02 |
| 35033 | without | 150 | 32 + 0,5 | 65 | 4 | | 46,02 |
| 35034 | inside | 150 | 32 + 0,5 | 65 | 3 | | 46,02 |
| 35035 | inside | 150 | 32 + 0,5 | 65 | 4 | | 46,02 |
| 35036 | outside | 150 | 32 + 0,5 | 65 | 3 | | 46,02 |
| 35037 | outside | 150 | 32 + 0,5 | 65 | 4 | | 46,02 |
| 35038 | both sides | 150 | 32 + 0,5 | 65 | 3 | | 46,02 |
| 35039 | both sides | 150 | 32 + 0,5 | 65 | 4 | | 46,02 |
| 35040 | without | 150 | 40 + 0,5 | 65 | 3 | 40-140-2<br>40-250-2 | 46,02 |
| 35041 | without | 150 | 40 + 0,5 | 65 | 4 | | 46,02 |
| 35042 | inside | 150 | 40 + 0,5 | 65 | 3 | | 46,02 |
| 35043 | inside | 150 | 40 + 0,5 | 65 | 4 | | 46,02 |
| 35044 | outside | 150 | 40 + 0,5 | 65 | 3 | | 46,02 |
| 35045 | outside | 150 | 40 + 0,5 | 65 | 4 | | 46,02 |
| 35046 | both sides | 150 | 40 + 0,5 | 65 | 3 | | 46,02 |
| 35047 | both sides | 150 | 40 + 0,5 | 65 | 4 | | 46,02 |
| 35048 | without | 150 | 50 + 0,5 | 65 | 3 | 50-140-3<br>50-250-3 | 46,02 |
| 35049 | without | 150 | 50 + 0,5 | 65 | 4 | | 46,02 |
| 35050 | inside | 150 | 50 + 0,5 | 65 | 3 | | 46,02 |
| 35051 | inside | 150 | 50 + 0,5 | 65 | 4 | | 46,02 |
| 35052 | outside | 150 | 50 + 0,5 | 65 | 3 | | 46,02 |
| 35053 | outside | 150 | 50 + 0,5 | 65 | 4 | | 46,02 |
| 35054 | both sides | 150 | 50 + 0,5 | 65 | 3 | | 46,02 |
| 35055 | both sides | 150 | 50 + 0,5 | 65 | 4 | | 46,02 |
| 35056 | without | 150 | 54 + 0,5 | 65 | 3 | 54-140-3<br>54-250-3<br>54-140-4<br>54-250-4 | 46,02 |
| 35057 | without | 150 | 50 + 0,5 | 65 | 4 | | 46,02 |
| 35058 | inside | 150 | 50 + 0,5 | 65 | 3 | | 46,02 |
| 35059 | inside | 150 | 50 + 0,5 | 65 | 4 | | 46,02 |
| 35060 | outside | 150 | 50 + 0,5 | 65 | 3 | | 46,02 |
| 35061 | outside | 150 | 50 + 0,5 | 65 | 4 | | 46,02 |
| 35062 | both sides | 150 | 50 + 0,5 | 65 | 3 | | 46,02 |
| 35063 | both sides | 150 | 50 + 0,5 | 65 | 4 | | 46,02 |
| 35064 | without | 150 | 32 + 0,5 | 70 | 3 | 32-140-2<br>32-250-2 | 46,02 |
| 35065 | without | 150 | 32 + 0,5 | 70 | 4 | | 46,02 |
| 35066 | inside | 150 | 32 + 0,5 | 70 | 3 | | 46,02 |
| 35067 | inside | 150 | 32 + 0,5 | 70 | 4 | | 46,02 |
| 35068 | outside | 150 | 32 + 0,5 | 70 | 3 | | 46,02 |
| 35069 | outside | 150 | 32 + 0,5 | 70 | 4 | | 46,02 |
| 35070 | both sides | 150 | 32 + 0,5 | 70 | 3 | | 46,02 |
| 35071 | both sides | 150 | 32 + 0,5 | 70 | 4 | | 46,02 |
| 35072 | without | 150 | 40 + 0,5 | 70 | 3 | 40-140-2<br>40-250-2 | 46,02 |
| 35073 | without | 150 | 40 + 0,5 | 70 | 4 | | 46,02 |
| 35074 | inside | 150 | 40 + 0,5 | 70 | 3 | | 46,02 |
| 35075 | inside | 150 | 40 + 0,5 | 70 | 4 | | 46,02 |
| 35076 | outside | 150 | 40 + 0,5 | 70 | 3 | | 46,02 |
| 35077 | outside | 150 | 40 + 0,5 | 70 | 4 | | 46,02 |
| 35078 | both sides | 150 | 40 + 0,5 | 70 | 3 | | 46,02 |
| 35079 | both sides | 150 | 40 + 0,5 | 70 | 4 | | 46,02 |
| 35080 | without | 150 | 50 + 0,5 | 70 | 3 | 50-140-3<br>50-250-3 | 46,02 |
| 35081 | without | 150 | 50 + 0,5 | 70 | 4 | | 46,02 |
| 35082 | inside | 150 | 50 + 0,5 | 70 | 3 | | 46,02 |
| 35083 | inside | 150 | 50 + 0,5 | 70 | 4 | | 46,02 |
| 35084 | outside | 150 | 50 + 0,5 | 70 | 3 | | 46,02 |
| 35085 | outside | 150 | 50 + 0,5 | 70 | 4 | | 46,02 |
| 35086 | both sides | 150 | 50 + 0,5 | 70 | 3 | | 46,02 |
| 35087 | both sides | 150 | 50 + 0,5 | 70 | 4 | | 46,02 |
| 35088 | without | 150 | 54 + 0,5 | 70 | 3 | 54-140-3<br>54-250-3<br>54-140-4<br>54-250-4 | 46,02 |
| 35089 | without | 150 | 54 + 0,5 | 70 | 4 | | 46,02 |
| 35090 | inside | 150 | 54 + 0,5 | 70 | 3 | | 46,02 |
| 35091 | inside | 150 | 54 + 0,5 | 70 | 4 | | 46,02 |
| 35092 | outside | 150 | 54 + 0,5 | 70 | 3 | | 46,02 |
| 35093 | outside | 150 | 54 + 0,5 | 70 | 4 | | 46,02 |
| 35094 | both sides | 150 | 54 + 0,5 | 70 | 3 | | 46,02 |
| 35095 | both sides | 150 | 54 + 0,5 | 70 | 4 | | 46,02 |

# BGW-magnetic holder type HM4

07/18(07/18)

The magnetic holders are special suitable to fix transportanchors with steel formworks. The used Neodymmagnets have, in contrast to other available magnetic holders which had been used in this case, a very strong adhesion even at a small room. Deviation heights respectively diameters you get on demand. The thread-pins are changeable or welded. The refitting of adhesion is possible.

### *BGW-magnetic holder type HM4 with changeable thread-pin (and snap rings)*

| Art.-no. | Thread pin | Adhesion kp | D 1 mm | D 2 mm | Height h mm | Price €/pcs |
|---|---|---|---|---|---|---|
| HM4-3 M 8 | M 8 | 50 | 65 | 60 | 12 | 47,00 |
| HM4-3 M10 | M 10 | | | | | |
| HM4-3 M12 | M 12 | | | | | |
| HM4-3 M14 | M 14 | | | | | |
| HM4-3 M16 | M 16 | | | | | |
| HM4-3 M18 | M 18 | | | | | |
| HM4-3 M20 | M 20 | | | | | |
| HM4-3 M24 | M 24 | | | | | |
| HM4-6 M 8 | M 8 | 100 | 65 | 60 | 12 | 60,00 |
| HM4-6 M10 | M 10 | | | | | |
| HM4-6 M12 | M 12 | | | | | |
| HM4-6 M14 | M 14 | | | | | |
| HM4-6 M16 | M 16 | | | | | |
| HM4-6 M18 | M 18 | | | | | |
| HM4-6 M20 | M 20 | | | | | |
| HM4-6 M24 | M 24 | | | | | |

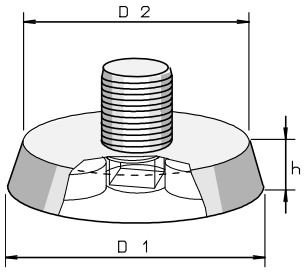


### *BGW-* threaded pin für HM4

At delivery, the magnet plate is supplied with a thread pin in a particular size, but it also can be used in combination with other sizes. To achieve a particular flexibility, this thread pin can be ordered independent of the magnetic plate. An easy exchange of the thread pins is made possible by a safety-ring, under which help the pin is fixed at the underside of the plate.

| art.-no. | Ø thread mm | €/pcs |
|---|---|---|
| 56131-08 | M 8 | 6,50 |
| 56153 | M 10 | 6,50 |
| 56131 | M 12 | 6,50 |
| 56132 | M 14 | 6,50 |
| 56133 | M 16 | 6,50 |
| 56134 | M 18 | 6,50 |
| 56135 | M 20 | 6,50 |
| 56136 | M 24 | 6,50 |

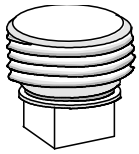

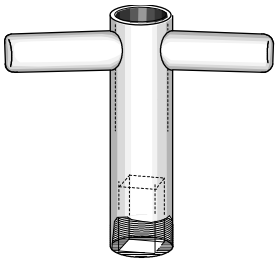

### *Key for BGW-*HM4

This is a square headed key, under which help the pin of the magnetic holder is turned into the thread of the anchor. After the concrete process, the magnet is removed out of the hard concrete by turning left.

| Art.-no. | Description | €/pcs |
|---|---|---|
| SchlüsselHM4 | Square key | 6,14 |

### *BGW-cover plate stainless steel for HM4*

| Art.-no. | Threaded-pin | D 1 mm | D 2 mm | Height h mm | Price €/pcs |
|---|---|---|---|---|---|
| 0900-08-E | M 8 | 64,5 | 59,5 | 12 | 18,75 |
| 0900-10-E | M 10 | | | | 18,75 |
| 0900-12-E | M 12 | | | | 18,75 |
| 0900-14-E | M 14 | | | | 23,20 |
| 0900-16-E | M 16 | | | | 25,30 |
| 0900-18-E | M 18 | | | | 28,80 |
| 0900-20-E | M 20 | | | | 33,65 |
| 0900-24-E | M 24 | | | | 42,85 |
| 0900-30-E | M 30 | | | | 51,95 |

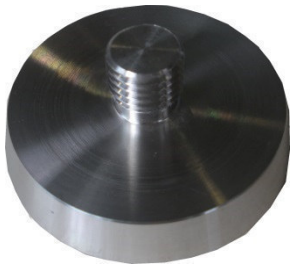

### *BGW-sealing disc made of stainless steel for HM4 for gluing*

| Art.-No. | Concrete cover | Ø D1 mm | Price €/pcs |
|---|---|---|---|
| 0911 | 2 | 46 | 8,00 |
| 09111 | 2 | 53 | |
| 09113 | 2 | 64 | |

# BGW-magnetic holder type HM4

07/18(07/18)

***With inside-6-on edge and welded threaded pin:***
***(An Allen key with Ø10 mm is used for this purpose)***

| Art.-No. | Thread pin | Adhesion kp | D 1 mm | D 2 mm | Height h mm | Price €/pcs |
|---|---|---|---|---|---|---|
| HM4-3 M 8-1 | M 8 | 50 | 65 | 60 | 12 | 47,00 |
| HM4-3 M10-1 | M 10 | | | | | |
| HM4-3 M12-1 | M 12 | | | | | |
| HM4-3 M14-1 | M 14 | | | | | |
| HM4-3 M16-1 | M 16 | | | | | |
| HM4-3 M18-1 | M 18 | | | | | |
| HM4-3 M20-1 | M 20 | | | | | |
| HM4-3 M24-1 | M 24 | | | | | |
| HM4-3 M30-1 | M 30 | | | | | |
| | | | | | | |
| HM4-6 M 8-1 | M 8 | 100 | 65 | 60 | 12 | 60,00 |
| HM4-6 M10-1 | M 10 | | | | | |
| HM4-6 M12-1 | M 12 | | | | | |
| HM4-6 M14-1 | M 14 | | | | | |
| HM4-6 M16-1 | M 16 | | | | | |
| HM4-6 M18-1 | M 18 | | | | | |
| HM4-6 M20-1 | M 20 | | | | | |
| HM4-6 M24-1 | M 24 | | | | | |
| HM4-6 M30-1 | M 30 | | | | | |

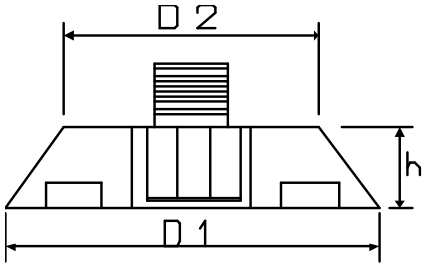


**For HM4 with changeable thread-pin: Set for welding**

| Thread-ping | | Thread bush | | | Price |
|---|---|---|---|---|---|
| Art.-no. | Size | Art.-No. | Thread pin | Ø inside mm | €/pcs |
| 56259 | M 6x16 | - | M 8 | 6 | 3,10 |
| | | 569701 | M 10 | | 3,20 |
| 561312 | M 8x15 | 569702 | M 12 | 8 | 3,40 |
| 561311 | M12x16 Ø 8,5 mm | - | M 14 | 9 | 3,60 |
| | | 5696 | M 16 | | 3,80 |
| | | - | M 18 | | 4,00 |
| | | 56961 | M 20 | | 4,20 |
| 56260 | M 12x16 | 56962 | M 24 | 12 | 4,40 |
| | | 56963 | M 30 | | 5,60 |
| 562432 | M 16x25 | 56965 | M 36 | 16 | 8,40 |
| | | 56966 | M 42 | | 12,80 |
| | | 56967 | M 52 | | 21,00 |

**Gewindebuchse und Gewindezapfen**

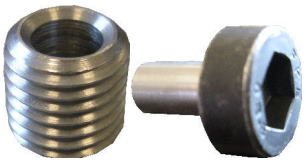

**BGW- Magnet HM4 with welded thread for one 24pcs socket (to take a larger torque)**

| Art.-no. | Thread pin | Adhesion kp | D 1 mm | D 2 mm | Height h mm | Price €/pcs |
|---|---|---|---|---|---|---|
| HM4-8 | M 24 - 52 | 120 | 100 | 96 | 22 | 105,00 |
| HM4-12 | M 24 - 52 | 180 | 100 | 96 | | 134,00 |
| HM4-8 | M 24 - 52 | 120 | 113 | 101 | 15 | 107,00 |
| HM4-12 | M 24 - 52 | 180 | 113 | 101 | | 136,00 |

**Interchangeable threaded stud - welding kit consisting of:**

| Hex bolt | | Threaded bush | | | | Price |
|---|---|---|---|---|---|---|
| Art.-no. | Size | Art-no. | Thread pin | Ø Inside mm | Concrete cover mm | €/pcs |
| 5622421 | M 12 x 16 | 56962 | M 24 | 12 | 15 | 4,40 |
| | | 56963 | M 30 | | | 5,60 |
| 5624320 | M 16 x 20 | 56963 | M 30 | 16 | | 5,60 |
| | | 56963 | M 36 | | | 8,40 |
| | | 56966 | M 42 | | | 12,80 |
| | | 56967 | M 52 | | | 21,00 |
| 562432 | M 16 x 25 | 56963 | M 30 | 16 | 22 | 5,60 |
| | | 56963 | M 30 | | | 5,60 |
| | | 56965 | M 36 | | | 8,40 |
| | | 56966 | M 42 | | | 12,80 |
| | | 56967 | M 52 | | | 21,00 |

# BGW-magnetic holder type HM4-P suitable for Pfeifer-system 07/18(07/18)

## BGW magnetic magnet HM4-P suitable for Pfeifer system

| Art.-No. | Thread | Adhesion kp | D 1 mm | D 2 mm | Height h mm | Price €/pcs |
|---|---|---|---|---|---|---|
| HM4-P-12 | M 12 | 50 | 50,5 | 47 | 10 | 40,90 |
| HM4-P-14 | M 14 | 50 | 55,5 | 52 | | 40,90 |
| HM4-P-16 | M 16 | 50 | 59,2 | 56 | | 40,90 |
| HM4-P-18 | M 18 | 50 | 62,5 | 59 | | 40,90 |
| HM4-P-20 | M 20 | 100 | 73,5 | 70 | | 56,24 |
| HM4-P-24 | M 24 | 150 | 78,2 | 74 | 12 | 56,24 |

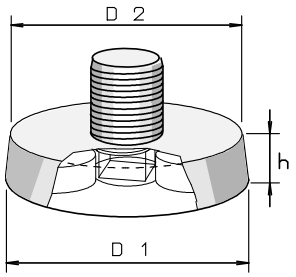


## HM4-F
**Magnetic magnet with replaceable threaded stud and ferrite magnets.**

| Art.-No. | Thread pin | Adhesion kp | D1/mm | D2/mm | Height/mm | Price €/pcs |
|---|---|---|---|---|---|---|
| HM4-F | M 8-24 | 10 | 52 | 50 | 11 | 13,00 |

## BGW-thread pin for HM4
At delivery, the magnet plate is supplied with a thread pin in a particular size, but it also can be used in combination with other sizes. To achieve a particular flexibility, this thread pin can be ordered independent of the magnetic plate. An easy exchange of the thread pins is made possible by a safety-ring, under which help the pin is fixed at the underside of the plate.

| Art.-No. | Thread | €/pcs |
|---|---|---|
| 56131-08 | M 8 | 6,50 |
| 56153 | M 10 | 6,50 |
| 56131 | M 12 | 6,50 |
| 56132 | M 14 | 6,50 |
| 56133 | M 16 | 6,50 |
| 56134 | M 18 | 6,50 |
| 56135 | M 20 | 6,50 |
| 56136 | M 24 | 6,50 |

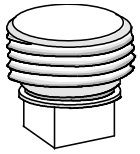

## Key for BGW-HM
This is a square headed key, under which help the pin of the magnetic holder is turned into the thread of the anchor. After the concrete process, the magnet is removed out of the hard concrete by turning left.

| Art.-No. | Description | €/pcs |
|---|---|---|
| SchlüsselHM4 | Vierkantschlüssel | 6,14 |

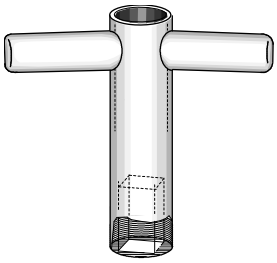

## BGW magnetic magnet type HM4-P with welded threaded stud for one 24pcs socket (to take a larger torque)

| Art.-No. | Thread | Adhesion kp | D 1 mm | D 2 mm | Height h mm | Price €/pcs |
|---|---|---|---|---|---|---|
| HM4-P-30 | M 30 | 150 | 94,2 | 90 | 12 | 81,81 |
| HM4-P-36 | M 36 | 150 | 105,2 | 101 | | 84,36 |
| HM4-P-42 | M 42 | 200 | 115,3 | 110 | 15 | 85,18 |
| HM4-P-52 | M 52 | 200 | 135,3 | 130 | | 92,03 |

## interchangeable threaded studs for 24 socket wrench: welded set

| Hex bolt | | Threaded bush | | | Price |
|---|---|---|---|---|---|
| Art.-No. | Size | Art.-No. | Thread | Ø Size mm | €/pcs |
| 5624320 | M 16 x 20 | 56964 | M 30 | 16 | 5,60 |
| | | 56965 | M 36 | | 8,40 |
| | | 56966 | M 42 | | 12,80 |
| | | 56967 | M 52 | | 21,00 |

## BGW screw plug with stainless steel thread for HM4-P

| Art.-No. | Thread Rd or M | D 1 mm | D 2 mm | Height h mm | Price €/pcs |
|---|---|---|---|---|---|
| HM4-P-12VE | 12 | 49,5 | 46 | 10 | 18,75 |
| HM4-P-14VE | 14 | 54,5 | 51 | | 23,20 |
| HM4-P-16VE | 16 | 58,2 | 55 | | 25,30 |
| HM4-P-18VE | 18 | 61,5 | 58 | | 28,80 |
| HM4-P-20VE | 20 | 72,5 | 69 | | 33,65 |
| HM4-P-24VE | 24 | 77,2 | 73 | 12 | 42,85 |
| HM4-P-30VE | 30 | 93,2 | 89 | | 51,95 |
| HM4-P-36VE | 36 | 104,2 | 100 | | 65,15 |
| HM4-P-42VE | 42 | 114,3 | 109 | 15 | 78,15 |
| HM4-P-52VE | 52 | 134,3 | 129 | | 101,45 |

# BGW-magnetic holder type HM4-D suitable for DEHA-Perfect Lifting Head 07/18(07/18)

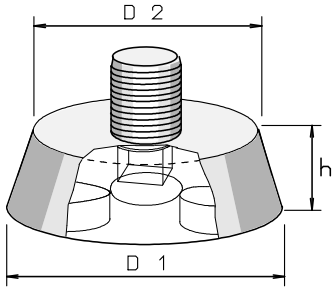


## *BGW-Haftmagnet Type HM4-D suitable for DEHA-Perfect head with interchangeable threaded stud (and retaining ring / Seegerring):*

| Art.-No. | Thread | Adhesion kp | D1 mm | D2 mm | Height h mm | Price €/pcs |
|---|---|---|---|---|---|---|
| HM4-D-45/10M20 | M 20 | 100 | 55 | 45 | 10 | 51,13 |
| HM4-D-45/10M24 | M 24 | 100 | 55 | 45 | 10 | 51,13 |

### BGW-thread pin for HM4

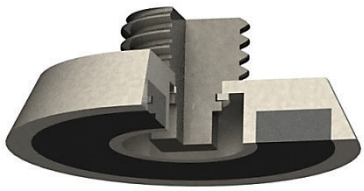

At delivery, the magnet plate is supplied with a thread pin in a particular size, but it also can be used in combination with other sizes. To achieve a particular flexibility, this thread pin can be ordered independent of the magnetic plate. An easy exchange of the thread pins is made possible by a safety-ring, under which help the pin is fixed at the underside of the plate.

| Art.-No. | Thread | €/pcs |
|---|---|---|
| 56135 | M 20 | 6,50 |
| 56136 | M 24 | 6,50 |

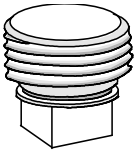

### Key for BGW-HM4

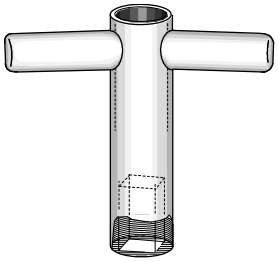

This is a square headed key, under which help the pin of the magnetic holder is turned into the thread of the anchor. After the concrete process, the magnet is removed out of the hard concrete by turning left.

| Art.-No. | Description | €/pcs |
|---|---|---|
| SchlüsselHM4 | Vierkantschlüssel | 6,14 |

## With welded threaded stud for hex wrench:

(a hex wrench Ø5 mm is used for this)

| Art.-No. | Thread | Cohesion kp | D1 mm | D2 mm | Height h mm | Price €/pcs |
|---|---|---|---|---|---|---|
| HM4-D-30/10M12-1 | M 12 | 50 | 40 | 30 | 10 | 40,90 |
| HM4-D-30/10M16-1 | M 16 | 50 | 40 | 30 | 10 | 40,90 |

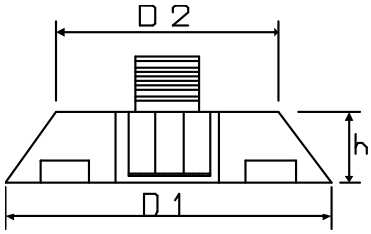


(a hex wrench Ø10 mm is used for this)

| Art.-No. | Thread | Cohesion kp | D1 mm | D2 mm | Height h mm | Price €/pcs |
|---|---|---|---|---|---|---|
| HM4-D-45/10M20-1 | M 20 | 100 | 55 | 45 | 10 | 51,13 |
| HM4-D-45/10M24-1 | M 24 | 100 | 55 | 45 | 10 | 51,13 |
| HM4-D-60/10M30-1 | M 30 | 120 | 70 | 60 | 10 | 85,18 |
| HM4-D-60/10M36 | M 36 | 120 | 70 | 60 | 10 | 85,18 |
| HM4-D-85/10M42 | M 42 | 120 | 95 | 85 | 10 | 125,00 |
| HM4-D-85/10M52 | M 52 | 120 | 95 | 85 | 10 | 125,00 |

### interchangeable threaded studs for allen wrenches - welding kit consisting of:

| Art.-No. | Thread pin | Art.-No. | Thread bush | Rifle Ø inside | Price €/pcs |
|---|---|---|---|---|---|
| 56393 | M 6 x 16 | 569701 | M 10 | 6 | 3,20 |
| | | 569700 | M 12 | | 3,40 |
| | | 569610 | M 16 | | 3,80 |
| 561311 | M 12 x 16 Ø 8,5 mm | 56961 | M 20 | 9 | 4,20 |
| | | 56962 | M 24 | | 4,40 |
| 56260 | M 12 x 16 | 56963 | M 30 | 12 | 5,60 |
| | | 56965 | M 36 | | 8,40 |
| 5624320 | M 16 x 20 | 56966 | M 42 | 16 | 12,80 |
| | | 56967 | M 52 | | 21,00 |

### Spare parts / repair accessories for HM4

| Art.-No. | Description | €/pcs |
|---|---|---|
| 54006 | Neodym-Magnet N40 Ø19,5x7 | 5,57 |
| 80019-1 | Klebstoff, hochfest, 10ml | 14,50 |

# *BGW*-magnetic holder type HM4

09/18(09/18)

## *BGW*-magnetic holder HM4 PU

These magnets are used especially for fixing threaded transport anchors to steel formwork. The neodymium magnet used achieves a high adhesive force in a small space. Different heights or Ø of the plate are available on request.

| Art.-No. | Thread | Adhesion kp | D 1 mm | D 2 mm | Height mm | Price €/pcs |
|---|---|---|---|---|---|---|
| HM4-8-1PU | M 8 | 35 | 40 | 30 | 12 | 59,00 |
| HM4-10-1PU | M 10 | | | | | |
| HM4-12-1PU | M 12 | | | | | |
| HM4-14-1PU | M 14 | | | | | |
| HM4-16-1PU | M 16 | | | | | |
| HM4-18-1PU | M 18 | | | | | |
| HM4-20-1PU | M 20 | | | | | |
| HM4-24-1PU | M 24 | | | | | |

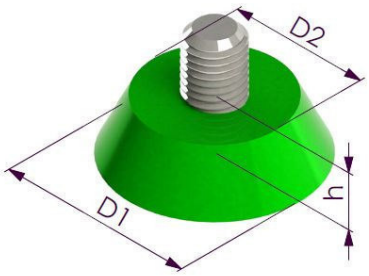


## *BGW*-magnet Hm4 - retaining plug made of steel, magnetic, galvanized (for Allen key SW 6)

For recessed installation of threaded anchor for higher Corrosion protection or higher concrete cover

| Art.-No. | Thread M | Concrete cover D | Ø D1 mm | Pcs | Price €/pcs |
|---|---|---|---|---|---|
| 56601 | M12 | 15 mm | Ø27 | 250 | 48,- |
| 56611 | M16 | 15 mm | Ø27 | 250 | 48,- |
| 56621 | M20 | 15 mm | Ø27 | 250 | 48,- |
| 56631 | M24 | 15 mm | Ø27 | 250 | 48,- |

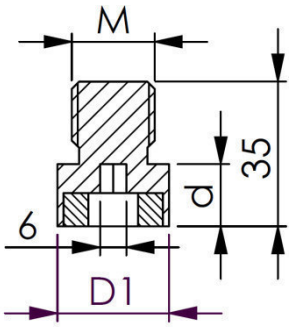

## *BGW*-magnet HM4 with Dywidag thread

The *BGW* magnet HM4 with Dywidag thread is specially designed for attaching anchor sleeves to steel formwork. Different heights or plates are available on request. Possible retrofitting of the adhesive force is possible

| art.-no. | thread DW Ø mm | thread length mm | adhesion kp | concrete cover | D 1 mm | Height h mm | Price €/pcs |
|---|---|---|---|---|---|---|---|
| HM4-3 Dywidag-K | 15 | 20 | 50 | 12 | 64,5 | 32 | 52,00 |
| HM4-3 Dywidag-L | 15 | 60 | 50 | 12 | 64,5 | 72 | 52,00 |
| HM4-6 Dywidag-K | 15 | 20 | 100 | 12 | 64,5 | 32 | 65,00 |
| HM4-6 Dywidag-L | 15 | 60 | 100 | 12 | 64,5 | 72 | 65,00 |

The welded-in threaded stem can be easily and conveniently removed from the formwork with a Ø 10 mm Allen key.

### Welding set for HM4-Dywidag

| Cylinder screw | | Threaded bush | | | | price €/piece |
|---|---|---|---|---|---|---|
| art.-no. | size mm | art.-no. | thread bush | thread-length | Ø inner | |
| 561311 | Ø8,5x16 | 569703 | DW Ø 15 mm | 20 mm | 9 mm | 4,50 |
| 561312 | M8x15 | 569704 | | 60 mm | M8 | 5,50 |

**Variante K**

**Variante L**

# *BGW*-magnetic holder type HM4-R

03/01(12/09)

## for fixing HT and KG pipes to steel formwork

These BGW holding magnets are especially suitable for fixing HT and KG pipes to steel formwork. Areas of application: manhole bases, ceilings, walls, binders etc.

The socket plug is positioned with the magnet on the formwork. The corresponding HT or KG pipe is attached, the finished part is concreted and the hardened concrete part is lifted off the formwork. The magnet can now be replaced with the lever again. The built-in rubber buffer absorbs forces induced on formwork and magnet.

### BGW-magnetic holder type HM4-R incl. socket plug

| art.-no. | for pipes ∅ mm | adhesion kp | price €/piece |
|---|---|---|---|
| HM4-R-3-40 | 40 | 50 | 46,00 |
| HM4-R-3-50 | 50 | 50 | 46,00 |
| HM4-R-3-70 | 70 | 50 | 46,00 |
| HM4-R-3-125 | 125 | 50 | 46,00 |
| HM4-R-3-150 | 150 | 50 | 46,00 |
| HM4-R-6-70 | 70 | 100 | 56,24 |
| HM4-R-6-100 | 100 | 100 | 56,24 |
| HM4-R-6-125 | 125 | 100 | 56,24 |

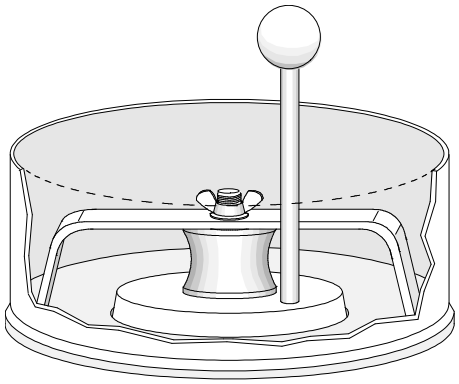

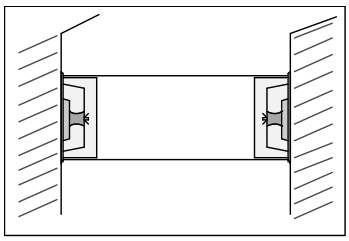

with standing formwork, the opening is fixed with 2 magnets

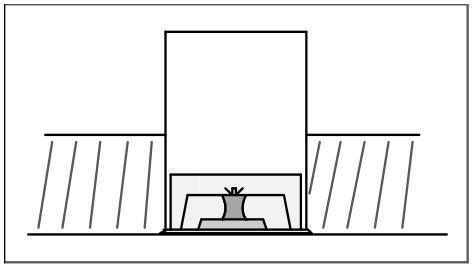

Installation example

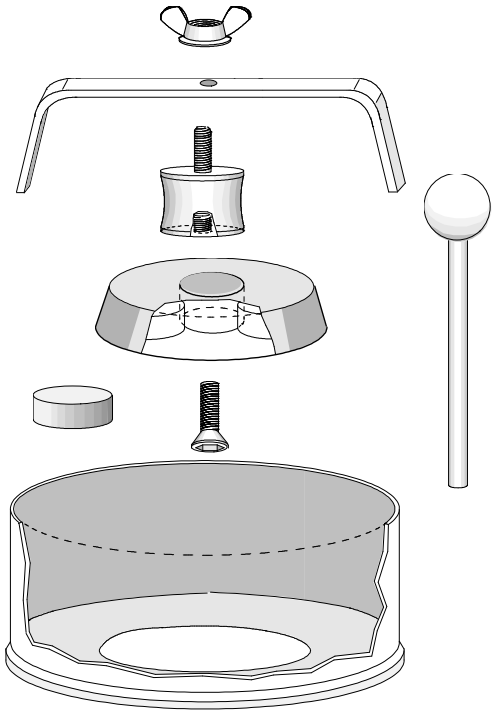

### Parts / Accessories

| Art.-Nr. | Bezeichnung | Maße mm | €/Stück |
|---|---|---|---|
| | release lever | | |
| 56337 | wing nut | M 8 | |
| | bow | sidth 60 | |
| | clamping element | M 8 | |
| 56138 | magnetic plate with 3 holes | outer ∅ 65 | |
| 56130 | magnetic plate with 6 holes | outer ∅ 65 | |
| 54006 | Magneteinsatz aus NE 35 | ∅ 19,5 x 7 | 5,57 |
| | Imbussschraube | M 8 | |
| 56490 | socket plug with hole, for | ∅ 70 | |
| 56491 | socket plug with hole, for | ∅ 100 | |
| 56492 | socket plug with hole, for | ∅ 125 | |
| 56493 | socket plug with hole, for | ∅ 150 | |

# Pocket former for Cast-In Loops - magnetic

05/14(05/01)

**PU-Pocket former, magnetic**

Magnetic pocket former for fixing Cast-in Loops or transport frames at concrete shaft-production.

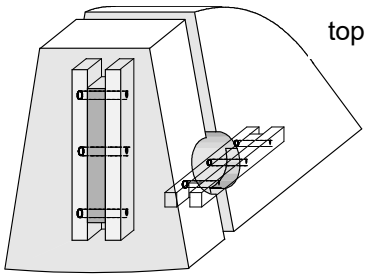


## Pocket former for Cast-in Loops

| art.-no. | title | €/piece |
|---|---|---|
| Recess-former for cast in loops | pocket former, 2-piece | 76,69 |

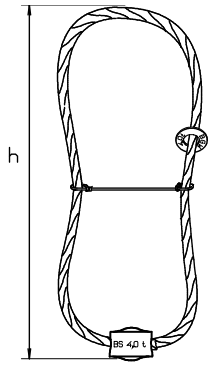


## Wire cable concrete loop consist of wire rope, galvanized

| art.-no. | load t | rope ∅ | €/piece |
|---|---|---|---|
| 4508 | 2,5 t | 10 mm | 2,90 |
| 4510 | 4,0 t | 12 mm | 4,10 |

**Mounting instruction:**

1. Formwork and pocket former spraying with releasing agent
2. Put skirt of pocket former (small, square) with magnet on sleeve side resp. on the bottom of shaft
3. Insert rope or transport frame allocated recess and fixing on reinforcement
4. Put the second half of the pocket former (round) on the first half with magnet on formwork so that transitions are slick.
5. After concreting and curing pull the shaft and remove the pocket former

Per sleeve install 3 pocket former (scale of shaft skirt divide into three) resp. detect emphasis.

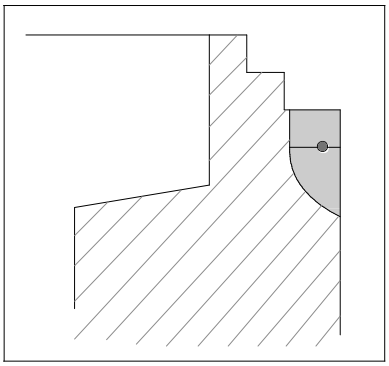

Example in shaft skirt DIN 1

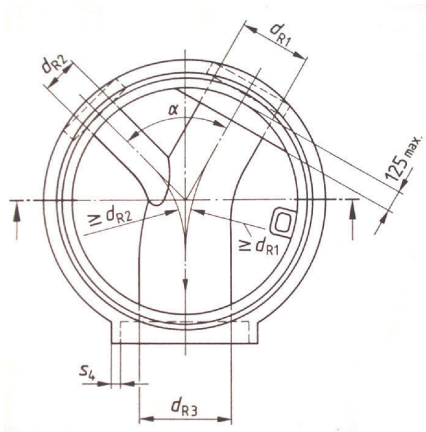

# *BGW-HM5* / capstan lifter - Supply

08/18 (08/18)

## *BGW*-HM5 / Kugelkopfanker – Zubehör 08/18 (08/18)

### *BGW*-Round Steel Pocket Former
### *BGW*-Aussparungskörper rund, aus Stahl

| art.-no | load | ∅ mm | concrete cover | ∅ drilling | weight kg | €/piece |
|---|---|---|---|---|---|---|
| 1650 | 1,0 – **1,3 t** | 60 | 10 mm | 20 | 0,40 | 37,70 |
| 1652 | 2,0 – **2,5 t** | 74 | 11 mm | 27 | 0,70 | 40,30 |
| 1654 | 4,0 – **5,0 t** | 94 | 15 mm | 37 | 1,60 | 40,30 |
| 1656 | 7,5 – **10 t** | 118 | 15 mm | 48 | 2,61 | 78,00 |
| 1658 | 15 – **20 t** | 160 | 15 mm | 70 | 7,00 | 107,90 |

### *BGW*-Round-Rubber-Pocket-Former with Magnet
### *BGW*-Aussparungskörper rund, PU m. Magnet

| art.-no | load | ∅ mm | concrete cover | ∅ drilling | €/piece |
|---|---|---|---|---|---|
| 1650GM | 1,0 – **1,3 t** | 60 | 10 mm | 20 | 75,40 |
| 1602GM | 2,0 – **2,5 t** | 74 | 11 mm | 27 | 80,60 |
| 1604GM | 4,0 – **5,0 t** | 94 | 15 mm | 37 | 80,60 |
| 1656GM | 7,5 – **10 t** | 118 | 15 mm | 48 | 117,00 |
| 1658GM | 15 – **20 t** | 160 | 15 mm | 70 | 146,90 |
| 1659GM | **32 t** | 214 | 27 mm | 88 | on demand |

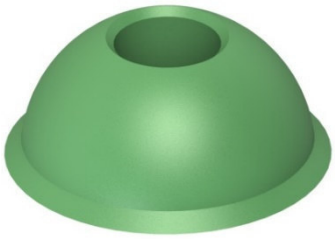

## *BGW*-Magnetic holder model HM5 / *BGW*-Haftmagnet Typ HM5

For fastening *BGW*-capstan-lifter on steel shutterings / zum Fixieren von *BGW*-Kugelkopfankern an der Stahlschalung

| art.-no | load anchor t | outer ∅ a [mm] | concrete cover mm | adhesion kp | interal ∅ b [mm] | €/piece |
|---|---|---|---|---|---|---|
| HM5-3-1,3 | 1,3 t | 60 | 10 | 50 | 20 | 39,90 |
| HM5-3-2,5 | 2,5 t | 74 | 11 | 50 | 27 | 53,20 |
| HM5-6-2,5 | 2,5 t | 74 | 11 | 100 | 27 | 66,50 |
| HM5-3-5,0 | 5,0 t | 94 | 15 | 50 | 37 | 59,80 |
| HM5-6-5,0 | 5,0 t | 94 | 15 | 100 | 37 | 73,00 |
| HM5-8-5,0 | 5,0 t | 94 | 15 | 120 | 37 | 106,30 |
| HM5-12-5,0 | 5,0 t | 94 | 15 | 180 | 37 | 132,90 |
| HM5-3-10,0 | 10,0 t | 118 | 15 | 50 | 48 | 73,10 |
| HM5-6-10,0 | 10,0 t | 118 | 15 | 100 | 48 | 86,41 |
| HM5-8-10,0 | 10,0 t | 118 | 15 | 120 | 48 | 113,00 |
| HM5-12-10,0 | 10,0 t | 118 | 15 | 180 | 48 | 146,20 |
| HM5-8-20,0 | 20,0 t | 160 | 15 | 120 | 71 | 250,00 |
| HM5-12-20 | 20,0 t | 160 | 15 | 180 | 71 | 290,00 |
| HM5-16-20 | 20,0 t | 160 | 15 | 240 | 71 | 330,00 |

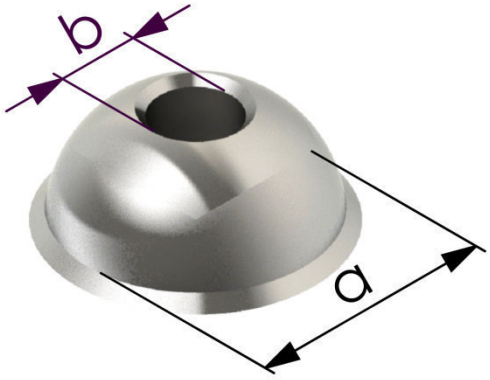


### *BGW*-Rubbersleeve for round steel pocket former
### *BGW*-Gummimanschette für Aussparungskörper rund, aus Stahl und Haftmagnet Typ HM5

| art.-no | load | outer ∅ | weight kg | €/piece |
|---|---|---|---|---|
| 1670 | 1,0 – **1,3 t** | 20 | 0,005 | 1,10 |
| 1679 | 2,0 – 2,5 t | 25 | 0,006 | 1,50 |
| 1672 | 2,0 – **2,5 t** | 27 | 0,006 | 1,60 |
| 1673 | 2,0 – **2,5 t** | 30 | 0,010 | 1,75 |
| 1674 | 4,0 – **5,0 t** | 37 | 0,016 | 2,40 |
| 1675 | 4,0 – 5,0 t | 38 | 0,017 | 2,45 |
| 1676 | **7,5 t** | 48 | 0,025 | 15,40 |
| 1678 | 8,0 – **10 t** | 48 | 0,029 | 26,90 |
| 1680 | **15 t** | 71 | 0,100 | 37,80 |
| 1682 | 15,0 - **20 t** | 71 | 0,115 | 44,20 |
| 1683 | **32 t** | 88 | 0,134 | 54,20 |

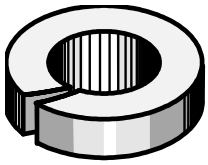

### *BGW*-steel pocket former with anchor-fixing socket for screwing on the formwork
### *BGW*-Aussparungskörper aus Stahl mit Ankerfixierhülse zum Anschrauben an Schalung

| art.-no | load | ∅ mm | concrete cover | €/piece |
|---|---|---|---|---|
| 1660 | 1,0 – 1,3 t | 60 | 10 mm | 72,00 |
| 1661 | 2,0 – 2,5 t | 74 | 11 mm | 101,60 |
| 1662 | 4,0 t | 94 | 15 mm | 132,35 |
| 1663 | 5,0 t | 94 | 15 mm | 132,35 |
| 1664 | 7,5 t | 118 | 15 mm | 159,10 |
| 1665 | 10,0 t | 118 | 15 mm | 159,10 |
| 1666 | 15,0 t | 160 | 15 mm | 219,45 |
| 1667 | 20,0 t | 160 | 15 mm | 219,45 |
| 1668 | 32,0 t | 214 | 27 mm | on demand |

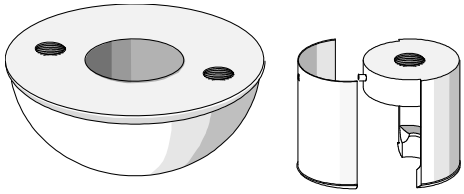

# *BGW*-capstan lifter - Supply *BGW*-Kugelkopfanker-Zubehör 07/18 (01/18)

For attaching to the steel formwork

***The Round Pocket Former is mounted with the ball anchor.***
***For mounting a rubbersleeve is necessary.***

## *BGW*-Round Steel Pocket Former

***BGW*-Aussparungskörper eirund, aus Stahl**

Easy installation on the formwork with M12 thread
Einfache Montage an der Schalung mit M12 Gewinde

| art.-no | load | outer-Ø d mm | concrete cover | drilling-Ø b mm | €/piece |
|---|---|---|---|---|---|
| 1651-1 | 1,0 – **1,3 t** | 60 | 10 mm | 20 | 37,70 |
| 1652-1 | 2,0 - **2,5 t** | 74 | 11 mm | 27 | 40,30 |
| 1653-1 | 2,0 - **2,5t** | 74 | 11 mm | 30 | 40,30 |
| 1654-1 | 4,0 - **5,0 t** | 94 | 15 mm | 37 | 78,00 |
| 1664-1 | 7,5 t – **10,0 t** | 118 | 15 mm | 48 | 107,90 |

## *BGW*- Round Poyurethan Pocket Former

***BGW*-Aussparungskörper eirund, aus Polyurethan**

Easy installation on the formwork with M12 thread
Einfache Montage an der Schalung mit M12 Gewinde

| art.-no | load | outer-Ø d mm | concrete cover | drilling-Ø b mm | €/piece |
|---|---|---|---|---|---|
| 1651-1PU | 1,0 – **1,3 t** | 60 | 10 mm | 20 | 37,70 |
| 1652-1PU | 2,0 - **2,5 t** | 74 | 11 mm | 27 | 40,30 |
| 1653-1PU | 2,0 - **2,5t** | 74 | 11 mm | 30 | 40,30 |
| 1654-1PU | 4,0 - **5,0 t** | 94 | 15 mm | 37 | 78,00 |
| 1664-1PU | 7,5 t – **10,0 t** | 118 | 15 mm | 48 | 107,90 |

## *BGW*-Round Steel Pocket Former, magnetic.

***BGW*- Aussparungskörper eirund, aus Stahl, magnetisch.**

Easy installation on the formwork, magnetic
Einfache Montage an der Schalung, magnetisch

| art.-no | load | outer-Ø d mm | concrete cover | drilling-Ø b mm | €/piece |
|---|---|---|---|---|---|
| 1651-1M | 1,0 – **1,3 t** | 60 | 10 mm | 20 | 75,40 |
| 1652-1M | 2,0 - **2,5 t** | 74 | 11 mm | 27 | 80,60 |
| 1653-1M | 2,0 - **2,5t** | 74 | 11 mm | 30 | 80,60 |
| 1654-1M | 4,0 - **5,0 t** | 94 | 15 mm | 37 | 117,00 |
| 1664-1M | 7,5 t – **10,0 t** | 118 | 15 mm | 48 | 146,90 |

## *BGW*-Round Polyurethan Pocket Former, magnetic

***BGW*- Aussparungskörper eirund, aus Polyurethan magnetisch.**

Easy installation on the formwork, magnetic
Einfache Montage an der Schalung, magnetisch

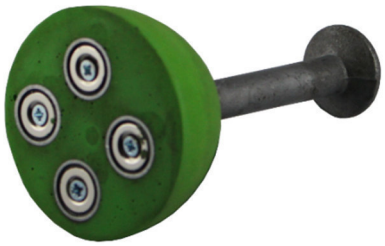

| art.-no | load | outer-Ø d mm | concrete cover | drilling-Ø b mm | €/piece |
|---|---|---|---|---|---|
| 1651-1PUM | 1,0 – **1,3 t** | 60 | 10 mm | 20 | 75,40 |
| 1652-1PUM | 2,0 - **2,5 t** | 74 | 11 mm | 27 | 80,60 |
| 1653-1PUM | 2,0 - **2,5t** | 74 | 11 mm | 30 | 80,60 |
| 1654-1PUM | 4,0 - **5,0 t** | 94 | 15 mm | 37 | 117,00 |
| 1664-1PUM | 7,5 t -**10,0 t** | 118 | 15 mm | 48 | 146,90 |

## *BGW*-Rubbersleeve for Round Steel Pocket Former

***BGW*- Gummimanschette für Aussparungskörper**

| art.-no | load | outer Ø | weight kg | €/piece |
|---|---|---|---|---|
| 1670 | 1,0 – **1,3 t** | 20 | 0,005 | 1,10 |
| 1679 | 2,0 – 2,5 t | 25 | 0,006 | 1,50 |
| 1672 | 2,0 – **2,5 t** | 27 | 0,006 | 1,60 |
| 1673 | 2,0 – **2,5 t** | 30 | 0,010 | 1,75 |
| 1674 | 4,0 – **5,0 t** | 37 | 0,016 | 2,40 |
| 1675 | 4,0 – 5,0t | 38 | 0,017 | 2,45 |
| 1676 | **7,5 t** | 48 | 0,025 | 15,40 |
| 1678 | 8,0 – **10 t** | 48 | 0,029 | 26,90 |
| 1680 | **15 t** | 70 | 0,100 | 37,80 |
| 1682 | 15,0 - **20 t** | 70 | 0,115 | 44,20 |
| 1683 | **32 t** | 88 | 0,134 | 54,20 |

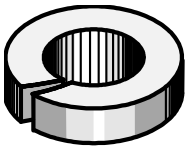

# BGW-magnetic holder HM6



This system is special suitable to fix concrete shutterings respectively fibre concrete shutterings right angled.

It consists of a tried and tested ***BGW*-magnetic holder** and a flexible clamp gadget.

It makes possible a time sharing working at high constant quality and is therefore special suitable for rotation fabrication.

**In one step, the shuttering is pressed at the magnet, right-angled to the work plate, and additional fixed against floating. For this, the wedge is knocked into the claw.**

The design **HM6-600-2 / HM6-1000-2** consists of two clamp gadgets and is therefore special suitable for pushing of fibre concrete shuttering.

All magnet models have a standard height of 230 mm, matching to rotation plants, but are available in other heights on demand.

To prevent the concrete shutterings, the claw is equipped with a hard rubber element. In order to stabilize the magnet body, at the front side stainless steel reinforcements are welded.

***All magnetic holders type HM 6 are with standard claw compatible and combinable.***

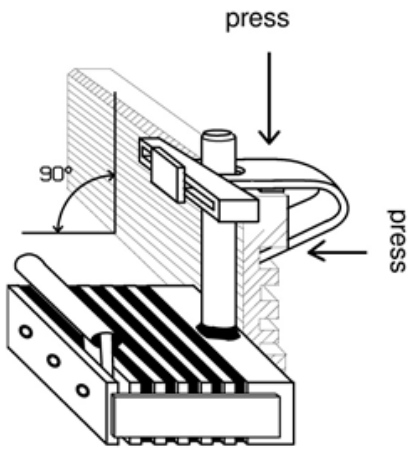


**HM6-600-1**
**HM6-1000-1**

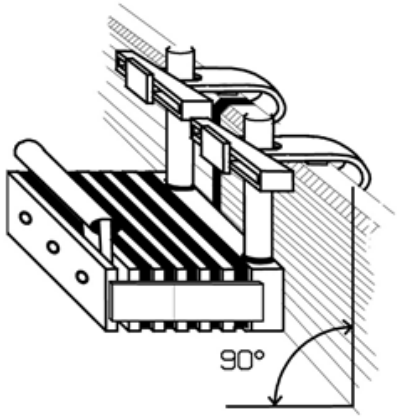


**HM6-600-2**
**HM6-1000-2**

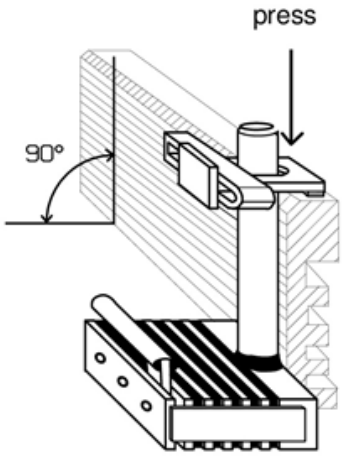


**HM6-600-3**
**HM6-1000-3**

| art.-no. | adhesion ca. kp | shift power | weight ca. kg | width mm | length mm | height mm | price €/piece |
|---|---|---|---|---|---|---|---|
| HM6-600-1 | 600 | 200 | 7,0 | 93 | 250 | 230 | 117,60 |
| HM6-1000-1 | 1000 | 350 | 11,0 | 140 | 250 | 230 | 155,94 |
| HM6-600-2 | 600 | 200 | 7,5 | 93 | 250 | 230 | 132,94 |
| HM6-1000-2 | 1000 | 350 | 11,5 | 140 | 250 | 230 | 171,28 |
| HM6-600-3 | 600 | 200 | 7,0 | 93 | 250 | 230 | 117,60 |
| HM6-1000-3 | 1000 | 350 | 11,0 | 140 | 250 | 230 | 155,94 |

## BGW-fixing claw and down holder for magnetic holder HM6

This article serves in combination with magnetic holder HM6 for fixing of fibre concrete shuttering or formwork during the concrete process. The underside is supplied with a hart rubber piece, to prevent damages to the plate in case of the increased fixing pressure. Delivery with wedge.

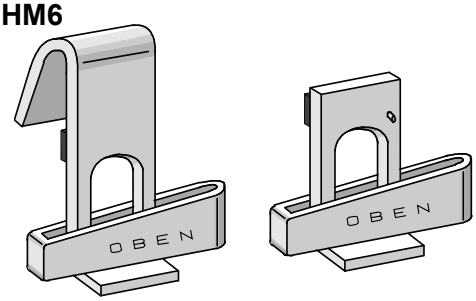


| art.-no. | name | €/piece |
|---|---|---|
| HM6-4 | fixing claw HM6 | 30,68 |
| HM6-5 | down holder HM 6 | 25,56 |

# Ruler for *BGW*-magnetic holder HM6-600-2

07/98(06/99)

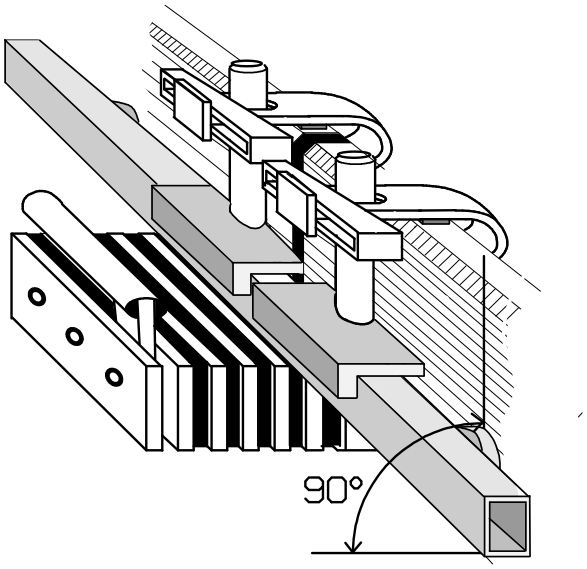


This gadget is constructed to align fibre concrete shuttering exactly straight.

By mean of the screws, the ruler is fixed to the columns of the BGW-HM6-600-2.

The always exact distance between the ruler and the shuttering ensure BGW-magnetic-holders, which are fixed in a distance of half a meter to each other at the ruler.

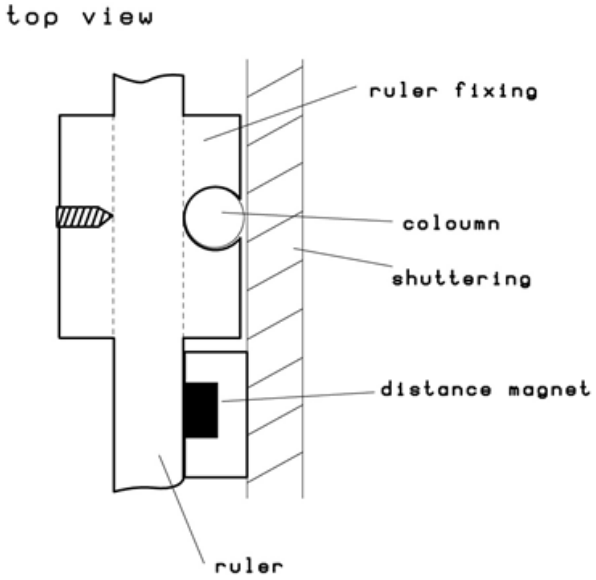


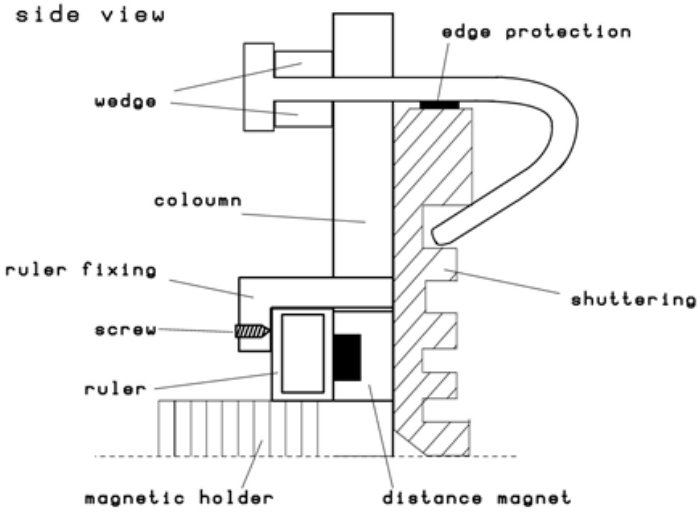

# BGW-magnetic holder type HM10

05/17(05/17)

The BGW-magnetic holder is for fastening steel formwork during the concrete process. Its rubber body fixes the shuttering against floating. It is a development of the already available sandwich- or slat-magnets.

The separated magnetic elements are poured in synthetics, which saves the system against blows, which could lead to a loose of magnetism. The plastic gives the magnet an extreme low weight, what has a favorable effect on handling and work safety. Moreover, using this construction, the adhesion of the magnet could been raised enormously.

My mean of its flat surface, it has very good cleaning qualities with nylon brushes.

The model HM10-2 has an inscription area, which can be sign, on the customer's demand with his company's logo.

*It is possible to change and to design the form, the dimensions and the adhesion as required!*

**HM10 steel surface**

**HM10 plastic surface**

**Magnet HM10-2**

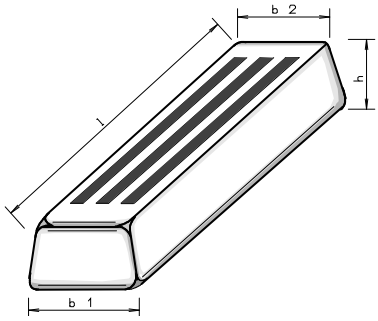


| art.-no. Magnet | adhesion kp | weight ca. kg | width mm b1 | b2 | length l mm | height h mm | model | price €/piece |
|---|---|---|---|---|---|---|---|---|
| HM10-1-50 | 1000 | 1,5 | 50 | 40 | 243 | 35 | plastic surface | 196,00 |
| HM10-1-55 | 1000 | 1,5 | 55 | 44 | 243 | 35 | plastic surface | 196,00 |
| HM10-2-50 | 1000 | 1,5 | 50 | 40 | 250 | 35 | steel surface | 196,00 |
| HM10-2-55 | 1000 | 1,5 | 55 | 44 | 250 | 35 | steel surface | 196,00 |

| art.-no. release lever | for magnet | price €/piece |
|---|---|---|
| HM10-1 Hebel50 | HM10-1-50 | 43,46 |
| HM10-1 Hebel55 | HM10-1-55 | 43,46 |
| HM10-2 Hebel50 | HM10-2-50 | 43,46 |
| HM10-2 Hebel55 | HM10-2-55 | 43,46 |

***Attention:***
***It is only allowed to take off the magnets HM10 with the fitting BGW-levers.***

***We can't take any guarantee by damage with other levers!***

**Magnet HM10-1**

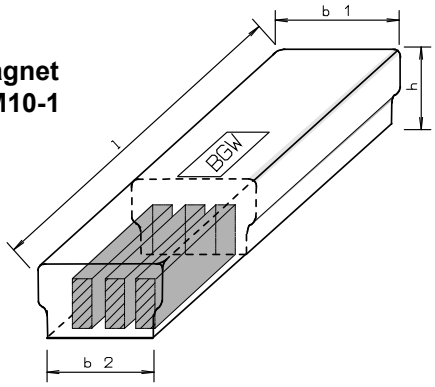


**Release lever for HM10-2**

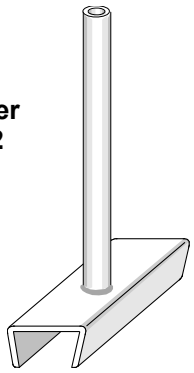

**Release lever for HM10-1**

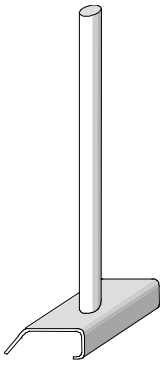

# Universal BGW fixing device for formworks

The universal BGW-fixing device is used for stepless and right-angled fastening of formwork, fiber concrete upstands and shuttering elements.

***Advantages***

- quick fastening of formwork
- exact 90° fixation of the formwork
- stepless height adjustment
- compact design

*down holder with round duct*

The BGW-fixing device consists of down holder and HM10-magnets. The down holder is available in two versions: with round or square duct. The down holder with square guide has higher stability and fixing security. The standard version of the BGW-fixing devices is for formwork up to max. height of 240mm. *Special designs on request.*

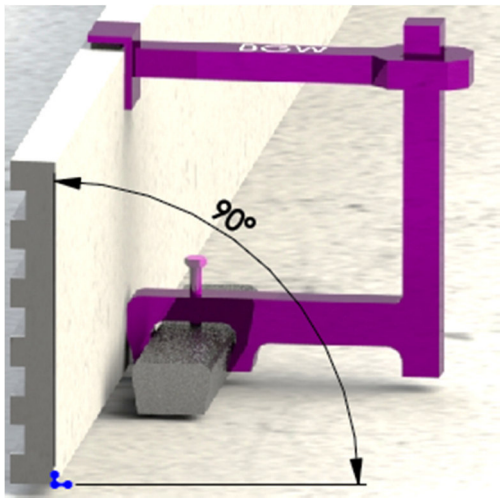


### down holder with round duct

| art.-no. | weight kg | length l mm | width b mm | height h mm | price €/piece |
|---|---|---|---|---|---|
| HM10-2-55-1 | 4 | 255 | 250 | 250 | 75,00 |

### down holder with square duct

| art.-no. | weight kg | length l mm | width b mm | height h mm | price €/piece |
|---|---|---|---|---|---|
| HM10-2-55-2 | 4 | 255 | 250 | 250 | 80,00 |

To fix a *down holder with square duct* formwork, first set up the formwork on the formwork table. Then position the HM10-magnet and the down holder on the formwork. Accurate position of the fixing device can be achieved by tapping with a rubber hammer on the HM10-magnet. By a light blow with a rubber hammer on the slider of the down holder you then clamp the formwork firmly.

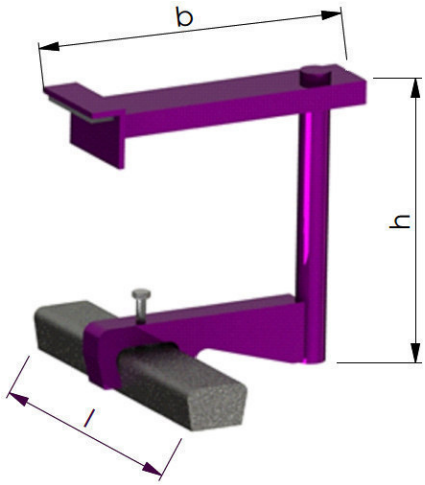


## **Magnetic holder HM10** steel surface

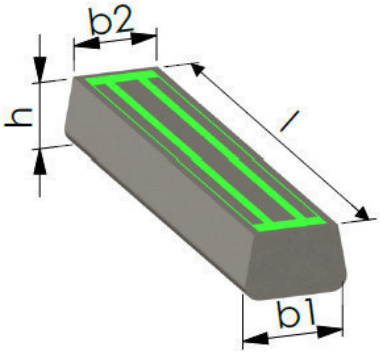


| art.-no. magnetic holder | adhesion kp | weight ca. kg | length l mm | width mm b | b1 | b2 | height h mm | price €/piece |
|---|---|---|---|---|---|---|---|---|
| HM10-2-55 | 600 | 1,5 | 250 | 270 | 55 | 44 | 35 | 117,60 |

# *BGW*-Formwork System type HM12

09/18(06/06)

This formwork-system is specially created for wall and ceiling production. It is made of plastic (polyurethane) in the bottom magnetic inserts are cast. Depending on size and length, a corresponding hollow material (e.g., plastic tube) is poured. As a result, both weight and torsional vulnerability can be kept as low as possible, which makes handling extremely easy even with long profiles. In addition, by the low weight and the absence of sharp metal edges increased safety at work. Damage to the table by falling sharp-edged metal formwork profiles is prevented by the use of the HM12 system.

The plastic PU used is characterized by very low weight and its smooth surface and does not swell during the concreting process.

**The advantages at a glance:**

- **magnetic bottom**
- **very leigth weight (about 3,5 kg/meter)**
- **easy handling**
- **high working safety**
- **no danger through sharp metal edges**
- **low-maintenance – no mooving parts**
- **smooth surface, low adherence**
- **stiff of torsion – 100% straigth**
- **space saving storage**
- **can be used as a transverse and longitudinal storage**

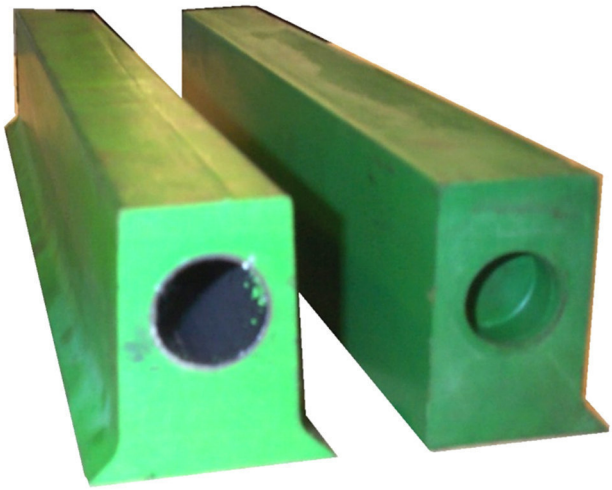

**BGW-Formwork System type HM12 height 70 mm**

| art.-no. | length mm | chamfer 10x45° | weight ca. kg | price €/piece |
|---|---|---|---|---|
| | 500 | without | 1,75 | |
| | 500 | one side | 1,75 | on demand |
| | 500 | both sides | 1,75 | |
| | 1000 | without | 3,50 | |
| | 1000 | one side | 3,50 | |
| | 1000 | both sides | 3,50 | |
| | 1500 | without | 5,25 | |
| | 1500 | one side | 5,25 | |
| | 1500 | both sides | 5,25 | |
| | 2000 | without | 7,00 | |
| | 2000 | one side | 7,00 | |
| | 2000 | both sides | 7,00 | |
| | 2500 | without | 8,75 | |
| | 2500 | one side | 8,75 | |
| | 2500 | both sides | 8,75 | |
| | 3000 | without | 10,50 | |
| | 3000 | one side | 10,50 | |
| | 3000 | both sides | 10,50 | |
| | 3500 | without | 12,25 | |
| | 3500 | one side | 12,25 | |
| | 3500 | both sides | 12,25 | |
| | 4000 | without | 14,00 | |
| | 4000 | one side | 14,00 | |
| | 4000 | both sides | 14,00 | |

**standard height: 70, 80, 90 100, 150mm**
**standard width: 25, 40, 60mm**
**(with or without chamfer)**

**adhesion force: 300 kg / meter**
**distribute oft he whole length**
**if desire also with more adhesive force**

h 90mm
b 40mm

h 70 or 80 mm
b (above) 15 mm
e. g. along division by ceiling production

h 70mm
b 60mm
here: with spezial push on, steel profile

# *BGW*-Formwork System type HM12 – supplies



## BGW-Extension profile with integrated magnetic elements

The extension profile is used for stepless adjustment of the formwork system HM12 to the respective panel width or length. In the U-profile made of high-quality steel, a magnetic element is embedded. This is arranged according to the requirements at the end of the profile or in the middle.

| art.-no. | for HM12 profile | | length mm | price € / piece |
|---|---|---|---|---|
| | height mm | width | | |
| HM12-2-82-27-2 | 60 | 25 | 1000 | on demand |
| HM12-2-92-27-2 | 70 | 25 | 1000 | |
| HM12-2-102-27-2 | 80 | 25 | 1000 | |
| HM12-2-112-27-2 | 90 | 25 | 1000 | |
| HM12-2-72-44-2 | 70 | 40 | 1000 | |
| HM12-2-82-42-2 | 80 | 40 | 1000 | |
| HM12-2-92-42-2 | 90 | 40 | 1000 | |
| HM12-2-72-62-2 | 70 | 60 | 1000 | |
| HM12-2-82-62-2 | 80 | 60 | 1000 | |
| HM12-2-92-62-2 | 90 | 60 | 1000 | |

On order: please give the position fort he magnetic elements (middle or end)
Other dimensions on request.

## *BGW-Push-On Profile* for the element ceiling production

This steel-profile can be pushed onto an existing Steel U-Profiles or the HM12 formwork system.
The shape of the profile warranties a concrete cover according DIN 1045-1 (for example on an element ceiling production).
The profile will be delivere by dimension according for the existing formwork-system (important: please indicate the basic profile).
Futhermore the BGW-Push-On Profile can deliverd with integrated apertures to screw tight on form.
Material: ST 52; lengh (l) up to 4000 mm

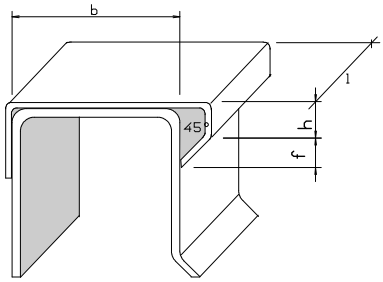


| art.-no. | B mm | H mm | F mm | price € / meter |
|---|---|---|---|---|
| | 25 | 10 | 10 | on demand |
| | 25 | 10 | 15 | |
| | 40 | 10 | 10 | |
| | 40 | 10 | 15 | |
| | 60 | 10 | 10 | |
| | 60 | 10 | 15 | |

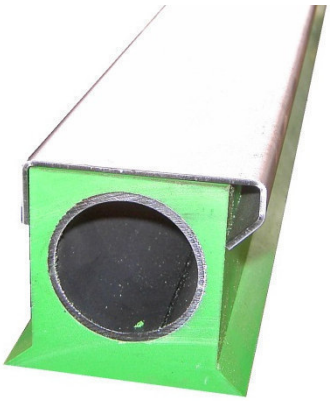

# *BGW*-Formwork System type HM12 – supplies

09/18(06/06)

Different solutions which facilitates the work with the Formwork System type HM12:

**bearing device**
e. g. for 10 or 20 profiles

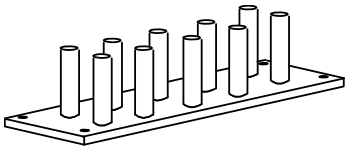

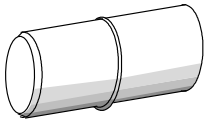

**connecting bolt**

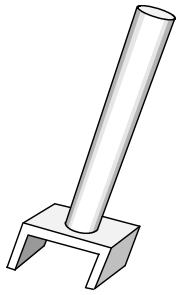

**Lever for HM12**
44,00 €/piece

| art.-no. | article | annotation | price € / piece |
|---|---|---|---|
| | bearing device | 10 pieces | |
| | bearing device | 20 pieces | |
| | bearing device | 30 pieces | |
| | lever | width 25 mm | 44,00 |
| | lever | width 40 mm | 44,00 |
| | lever | width 60 mm | 44,00 |
| | connecting bolt | for width 40 + 60 mm | 5,00 |

## HM12 additional profiles and magnets

For retrofitting existing formwork or creating pieces of furniture

**Furthermore, they are excellently suited for retrofitting in plastic transverse stops (for example in the production of element ceilings)**

| art.-no. | article | annotation | price € / piece |
|---|---|---|---|
| 540322 | magnetic elements | Ø 32 x 7 mm | 7,00 |
| Lochfräse | Milling tool | appropriate to magnetic elements | 35,00 |
| 56940 | Spezial screw | 6,3 x 50 self drilling | on demand |
| HM12-P-60-40 | profile 40 x 70 | length 1m | |
| HM12-P-70-40 | profile 40 x 80 | length 1m | |
| HM12-P-80-40 | profile 40 x 90 | length 1m | |
| HM12-P-70-60 | profile 60 x 70 | length 1m | |
| HM12-P-80-60 | profile 60 x 80 | length 1m | |
| HM12-P-90-60 | profile 60 x 90 | length 1m | |

# *BGW*-Slot Former System HM12

09/18(06/06)

The BGW-Slot Former System HM12 is designed tob e light, easy to handle and extremely resistant to wear. Due to the special manufacturing process, the profile shape can be adapted to your individual production. The magnetic adhesive forces are dimensioned for the respective application. The formwork system can be sawed off, depending on the desired length. However, it is important to pay attension to the position of the magnetic inserts, so as not to affect the functionality of the sections.

**The advantages at a glace:**

- **magnetic bottom**
- **plastic PU – does not swell up**
- **smooth, low-adhesion surface**
- **very low weight**
- **low maintenance**
- **easy to use**
- **stiff of torsion – 100% straight**
- **space saving storage**

**BGW-Vergußnutsystem Typ HM12**

| bottom mm | top side mm | height h mm | price € / m |
|---|---|---|---|
| 30 | 10 | 10 | on demand |
| 40 | 25 | 25 | |
| 40 | 35 | 25 | |
| 50 | 40 | 30 | |
| 60 | 40 | 40 | |
| 70 | 40 | 25 | |
| 75 | 30 | 40 | |
| 80 | 50 | 40 | |
| 80 | 75 | 30 | |
| 90 | 60 | 35 | |
| 90 | 70 | 50 | |
| 120 | 70 | 40 | |
| 120 | 90 | 50 | |
| 130 | 80 | 40 | |
| 160 | 130 | 50 | |

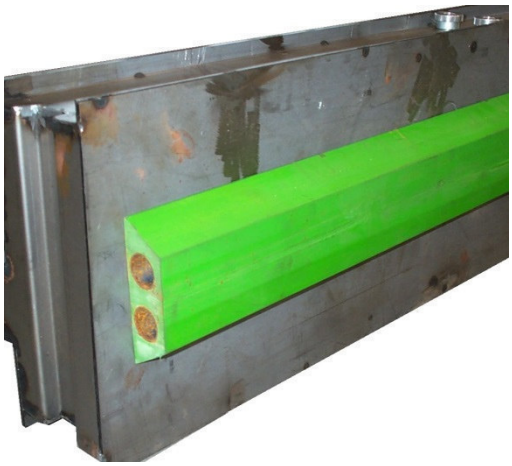

**Application Notes**:
It is advisable to spray new parts twice with release agent to avoid the adhesion of concrete. Then position the slot former at the desired location and cast in concrete. After removing the prefabricated part, retrain it, spray profile and formwork with release agent, etc.

It is essential to ensure that the formwork not be placed with the magnetic side each other. Should this be the case, the systems may only be pushed apart laterally (do not pull apart, otherwise the magnets will be torn out of the plastic)! In case of improper handling we can not guarantee!

# BGW-Formwork System Type HM13



- **on customer request we dense all welds and all impacts with acrylic/silicone**
- **also galvanized available**

## Different profiles – Production on customer concern

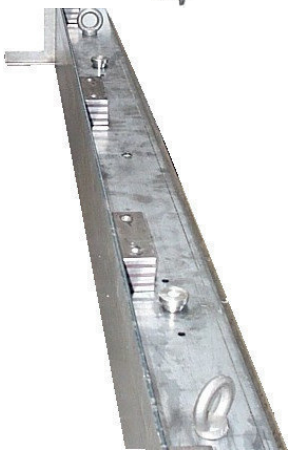

# *BGW*-formwork-system HM13



## *The comfortable solution*

The integrated Magnet-system

This formwork system, consisting of a formwork profile with built-in magnetic clamping mechanism, can be installed in different formwork.
It is particularly suitable for the production of filigree or double walls and lattice girder ceilings.

Advantages of the HM13-system on one view:

- **very leight weight**
- simple and safe handling
- simple servicing due to open system
- changing the formwork just by removing three screws
- insensitive to concrete contamination since polyurethane (magnet), formwork steel
- easy to clean
- magnetism keeps system at the switching table. Comparable products fall down when operating the handling knob (faulty circuit, risk of injury when prepare the formwork)
- the springs pull the formwork down to the table and prevent the penetration of concrete (with 120kg per magnet unit
- spring elements help to unlock the magnets when demoulding.
- Non-magnetic handling knop enables to stack up the profiles
- Magnetic power of 900kg, depending on Ground Surface (steel, thickness, temperatur, ruffness), Straightness of the underground)

The formwork profile (planing surfaces planed) is pulled by the clamping mechanism (steel spring) - by operating the operating knob with the foot or robot - with 120 kg per magnet unit onto the shuttering bottom, whereby an exact edge formation of the part to be concreted is achieved. Due to the fact that the system forms a unit, measurement errors are impossible (magnet and formwork one unit).
The switching of the magnet is only possible on a steel base. Otherwise, the steel springs hold the magnet in the rest position, which has a positive effect on safety at work (for example, when calibrating the formwork, fingers can not be crushed under the formwork). With the help of the appropriate release lever, the system can be easily detached and removed from the formwork base.

The separate arrangement of clamping mechanism and control knob, as well as clamping mechanism and formwork, the forces introduced when concreting on shuttering and magnet forces are absorbed.
The built-in preload elements are positioned protected, making the formwork system less sensitive to contamination. The built-in stroke limiter prevents overstressing the clamping mechanism. The magnet is cast in impact-resistant and heat-resistant polyurethane, which is insensitive to concrete adhesion.
**Note: Insert profiles into formwork oil before first use! This also provides adequate rust protection and facilitates the cleaning of the formwork.**

In order to enable the stackability and to avoid sticking of the formwork profile, the operating knob is made of non-magnetic material. The system is, if agreed, suitable for magazines and robots.
Tolerances: length +/- 0.2 mm, width +/- 1 mm, height +/- 1 mm standard.

**In case of a possible defect, the old formwork can be easily replaced by loosening 3 screws.**

*Different shapes and dimensions are available on request.*

# *BGW*-Formwork System Type HM13
# *The comfortable solution*



This formwork system, consist of a formwork-profile with integrated magnetic tension-mechanism, which can be used in different formworks. It is especially suitable for the production of filigran- respectively double walls and lattice girder ceilings.

By mean of the tension-mechanism, the profile (layer is planed) is pulled to the bottom of the shuttering, so that an exactly edge of the manufactured item is managed. For the system is one unit, measuring mistakes are not possible. The easy and quick handling increases the work safety. Using the corresponding lever, the system can be taken off and removed easily from the bottom of the shuttering.

By mean of the separated arrangement of tension mechanism and handle-knob, and tension mechanism and shuttering, the forces acting on the formwork and on the magnet during the concrete process are absorbed.
The built-in tension elements are placed in a save position, so that the formwork system is less sensitive against soiling.
**Note: Recess profiles before first using into oil!**

To make possible a stacking up, and to prevent that the formwork stick to each other, the knob is made out of antimagnetic material. The system can also be delivered storeroom- and robot capable.

**With defect the old shuttering, by remove from 3 screws, can be easily exchanged.**

Declining shapes and dimensions on demand.

## *BGW*-Formwork System Type HM13

| art.-no. | length mm | height mm | numbers of magnets | chamfers 10x45° | weight ca. kg | price €/piece |
|---|---|---|---|---|---|---|
| 3200 | 500 | 70 | 1 | one side | 3,35 | 180,71 |
| 3205 | 500 | 70 | 1 | both sides | 3,35 | 180,71 |
| 3210 | 1000 | 70 | 2 | one side | 6,70 | 351,19 |
| 3215 | 1000 | 70 | 2 | both sides | 6,70 | 351,19 |
| 3220 | 1500 | 70 | 2 | one side | 9,05 | 366,53 |
| 3225 | 1500 | 70 | 2 | both sides | 9,05 | 366,53 |
| 3230 | 2000 | 70 | 2 | one side | 11,40 | 381,87 |
| 3235 | 2000 | 70 | 2 | both sides | 11,40 | 381,87 |
| 3240 | 2500 | 70 | 2 | one side | 13,75 | 397,21 |
| 3245 | 2500 | 70 | 2 | both sides | 13,75 | 397,21 |
| 3250 | 3000 | 70 | 2 | one side | 16,10 | 412,55 |
| 3255 | 3000 | 70 | 2 | both sides | 16,10 | 412,55 |
| 3260 | 3500 | 70 | 2 | one side | 18,45 | 427,89 |
| 3265 | 3500 | 70 | 2 | both sides | 18,45 | 427,89 |
| 3270 | 4000 | 70 | 2 | one side | 20,80 | 443,23 |
| 3275 | 4000 | 70 | 2 | both sides | 20,80 | 443,23 |
| 3280 | 4000 | 70 | 3 | one side | 21,80 | 603,49 |
| 3285 | 4000 | 70 | 3 | both sides | 21,80 | 603,49 |

*Costs for cut at declining length € 3,07*

## Length compensation profile, suitable for the formwork system HM13

for putting on, metal strength 2 mm, length 1.000 mm

| description | €/piece |
|---|---|
| profile with magnets | 246,27 |
| profile without magnets | 30,68 |

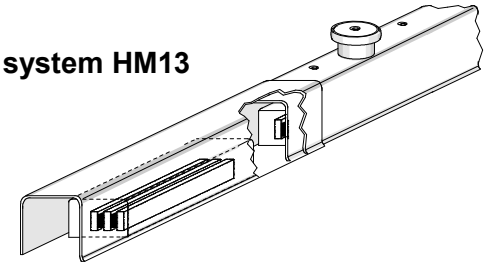

## Profile for replacement

Planing surfaces planed

| weight | chamfer 10x45° | €/mtr. |
|---|---|---|
| 4,70 kg/mtr. | one side | 30,68 |
| 4,70 kg/mtr. | both sides | 30,68 |

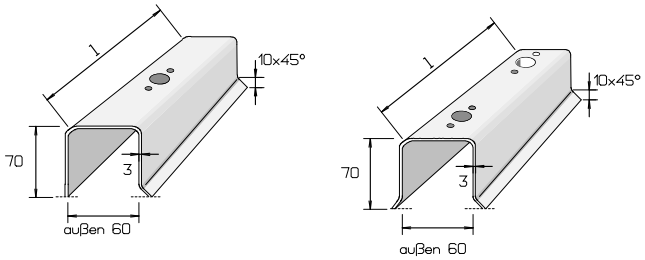

# *BGW*-Formwork System Type HM13 Supplys



| art.-no. | Name | €/piece |
|---|---|---|
| 3350 | magnetic holder HM13 200x54x34 | 160,00 |
| 3360 | lever | 43,46 |
| 33653 | handle-knob – antimagnetic (consist of head, socket and pressure disc) | 15,34 |
| 56291 | screw M 8 x 60 – burnished black | 0,56 |
| 56345 | scres M 8 x 60 – stainless steel | 1,12 |
| 3376 | tension element – steel spring | 7,78 |
| 3384 | hoist limiting | 3,18 |
| 56399 | fixing screw M 8 x 12 | 0,38 |
| 56380 | thread tack M 8 x 25 | 0,36 |
| 3306 | fixing gadget for 1 magnet HM13 | 7,36 |
| 3304 | Gadget for storeroom handling, both sides. | 6,54 |
| 3302 | milling for transverse profile, both sides | 6,74 |
| 3300 | drilling for robot handling (2 each profile) | 5,94 |
| 56421 | stuff GPN 300 V 112 – Rd/M 16 colourless | 0,14 |

Ablösehebel

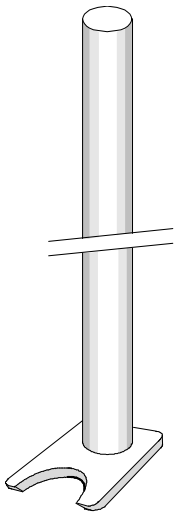

handle-knob

spacer sleeve
(Length depends on profile height)

pressure disc

screw

stuff

handle-knob completely

fixing screw

Fixing screw with steel spring with thread tack

steel spring

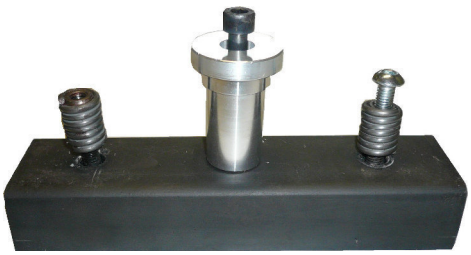

magnetic holder type HM13

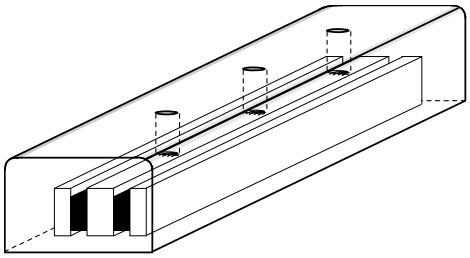

# *BGW*-Formwork System Type HM13 – *special heights* 03/07(05/01)

für Massivwandfertigung

All formwork systems are deliverable without, with one side or with both-sides chamfer. It is possible to change the shape and dimensions on request! *Different dimensions are available on request.*

### *BGW*-Formwork System type HM13 – special heights

| length mm | numbers of magnets | height mm | price €/piece |
|---|---|---|---|
| 500 | 1 | 85 | price on request |
| 1000 | 2 | | |
| 1500 | 2 | | |
| 2000 | 2 | | |
| 2500 | 2 | | |
| 3000 | 2 | | |
| 3500 | 2 | | |
| 4000 | 2 | | |
| 4000 | 3 | | |
| 500 | 1 | 100 | |
| 1000 | 2 | | |
| 1500 | 2 | | |
| 2000 | 2 | | |
| 2500 | 2 | | |
| 3000 | 2 | | |
| 3500 | 2 | | |
| 4000 | 2 | | |
| 4000 | 3 | | |
| 500 | 1 | 150 | |
| 1000 | 2 | | |
| 1500 | 2 | | |
| 2000 | 2 | | |
| 2500 | 2 | | |
| 3000 | 2 | | |
| 3500 | 2 | | |
| 4000 | 2 | | |
| 4000 | 3 | | |
| 500 | 1 | 200 | |
| 1000 | 2 | | |
| 1500 | 2 | | |
| 2000 | 2 | | |
| 2500 | 2 | | |
| 3000 | 2 | | |
| 3500 | 2 | | |
| 4000 | 2 | | |
| 4000 | 3 | | |

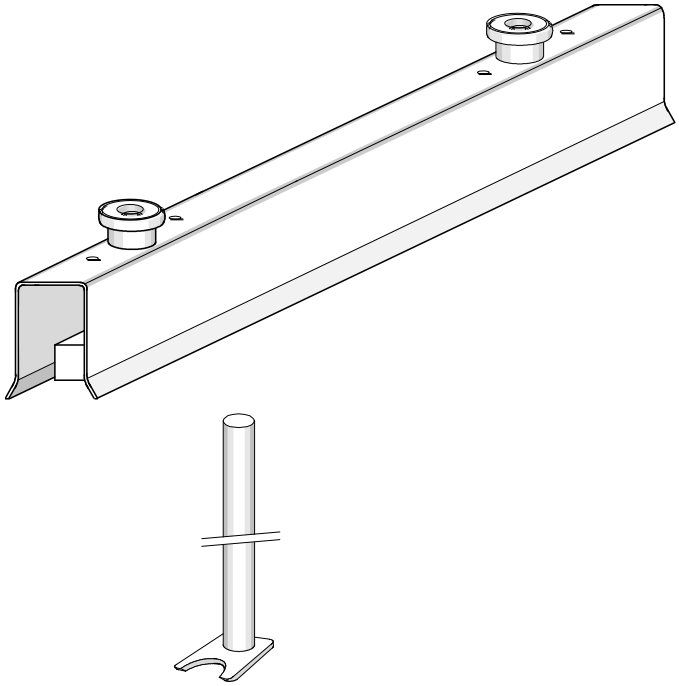

### Length compensation profile, suitable for the Formwork System HM13

for putting on, metal strength 2 mm, length 1.000 mm

| height mm | description | price €/piece |
|---|---|---|
| 85 | profile with magnets | 138,05 |
| | profile without magnets | 35,79 |
| 100 | profile with magnets | 143,16 |
| | profile without magnets | 40,90 |
| 150 | profile with magnets | 153,39 |
| | profile without magnets | 51,13 |
| 200 | profile with magnets | 163,61 |
| | profile without magnets | 61,36 |

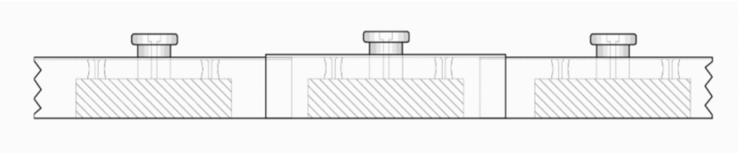

### U-Profile, layer is planed

| art.-no. | chamfers | height mm | price €/piece |
|---|---|---|---|
| | one side | 85 | 35,79 |
| | both sides | | 35,79 |
| | one side | 100 | 40,90 |
| | both sides | | 40,90 |
| | one side | 150 | 51,13 |
| | both sides | | 51,13 |
| | one side | 200 | 61,36 |
| | both sides | | 61,36 |
| 3306 | fixing gadget for 1 magnet HM13 | | 3,68 |
| 3304 | gadget for storeroom handling, both sides | | 3,27 |
| 3302 | milling for transverse profile, both sides | | 3,37 |
| 3300 | drilling for robot handling (2 each profile) | | 2,97 |
| 3360 | lever | | 43,46 |

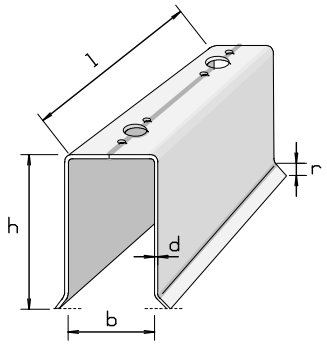

# *BGW*-formwork system type HM13 – *Special equipments* 09/00(01/01)

for solid wall production

This formwork system is characterized by a control mechanism, which, as with all other formwork systems of the HM 13-series, is extremely favorably to handling and a little contamination susceptible. .

In order to achieve an optimal protection against the penetration of the liquid concrete between profile and formwork and around, the profiles were planed off on both sides, down and above.

The profiles are additionally reinforced with cross struts, which ensures a very high rigidity.

If necessary, it is possible to cover the magnetic elements in order to protect them against contamination.

The profiles are available in lengths of up to 4 meters.

*Other length and height dimensions, especially for your production requirements, are available on request.*

**Formwork system type HM13**
**with profile on both sides**

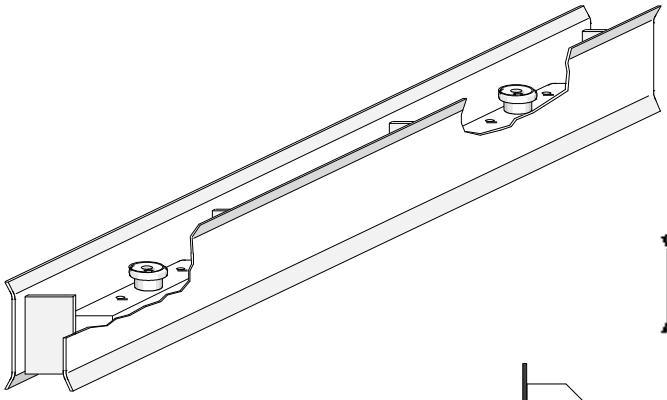

**with profile on one side**

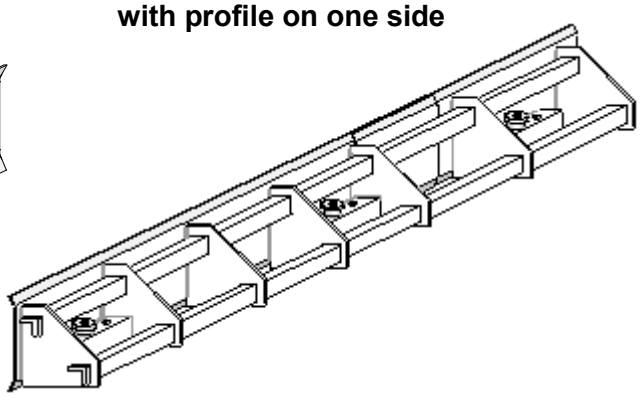

**Versions (cross section):**
(e.g. profiles with different heights)

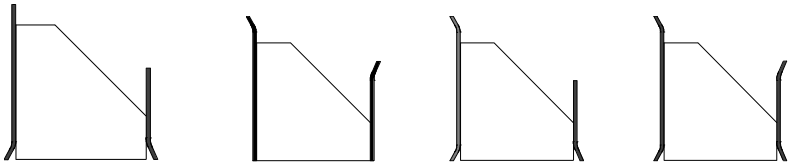

## *BGW*-formwork system type HM13 with welded-on angles or plates

On a welded plate on the longitudinal or front side of the magnet, wooden formwork can be firmly and securely screwed. An angle with a fixing screw is used to secure the shutter against floating during compacting of the concrete.

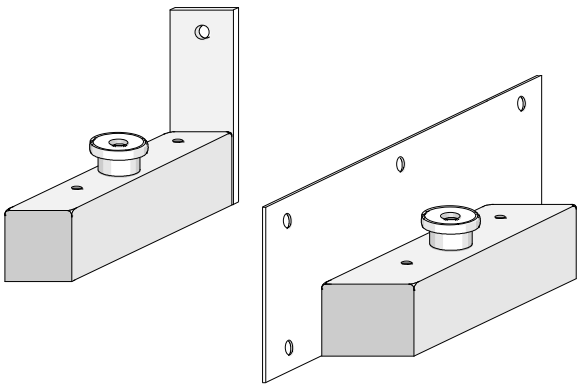

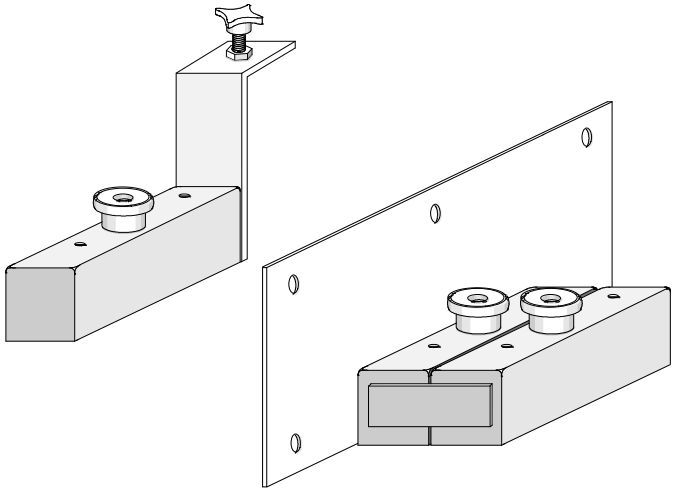

**Every prices on demand!**

# *BGW*-Formwork system type HM13 – the adaptable Solution 10/10(10/10)

A formwork system with integrated magnet HM13 and steel spring mechanism. This special version can be used similar to the standard formwork profiles for the production of double walls and finished ceilings. In addition, a formwork increase can be screwed to the integrated threads of size M16. Thus, the same basic formwork can be made in a few easy steps for the production of thicker solid concrete components such. Intermediate walls with a thickness of 120 or 150 mm are used.

**The formwork has the following specifications:**

- integrated magnets with steel spring switching mechanism
- The number and force of the magnets depends on the maximum formwork height
- height basic formwork 70-90 mm
- Integrated thread for fixing formwork elevations
- Planed bottom edges for best concrete finish
- length z.B. 500 – 4000 mm (Intermediate lengths possible)

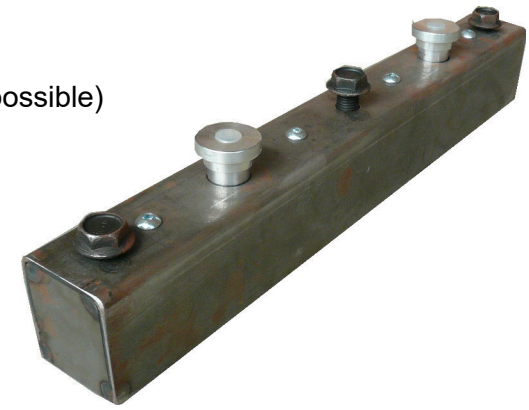

Basic profile - hight 80 mm

| art.-no. | length mm | number of magnets | chamfer 10x45° | price €/piece |
|---|---|---|---|---|
| 3200-M16 | 500 | 2 | without | 240,- |
| 3205-M16 | 500 | 2 | one side | 240,- |
| 3210-M16 | 1000 | 2 | without | 255,- |
| 3215-M16 | 1000 | 2 | one side | 255,- |
| 3220-M16 | 1500 | 2 | without | 270,- |
| 3225-M16 | 1500 | 2 | one side | 270,- |
| 3230-M16 | 2000 | 2 | without | 285,- |
| 3235-M16 | 2000 | 2 | one side | 285,- |
| 3240-M16 | 2500 | 3 | without | 414,- |
| 3245-M16 | 2500 | 3 | one side | 414,- |
| 3250-M16 | 3000 | 3 | without | 429,- |
| 3255-M16 | 3000 | 3 | one side | 429,- |
| 3260-M16 | 3500 | 3 | without | 444,- |
| 3265-M16 | 3500 | 3 | one side | 444,- |
| 3280-M16 | 4000 | 3 | without | 459,- |
| 3285-M16 | 4000 | 3 | one side | 459,- |

height 150mm
with chamfer
10 x 45°
above + below

**Adapters for Basic Profile with 80 mm heigth**
Formwork increase can be made customer-related
We will give you an offer for your application

- height 80 mm to over 300 mm
- with or without chamfer (above/below)
- Material quality steel thickness e.g. 3,0-5,0 mm
- also possible on both sides conreting (save space)

Expamples:

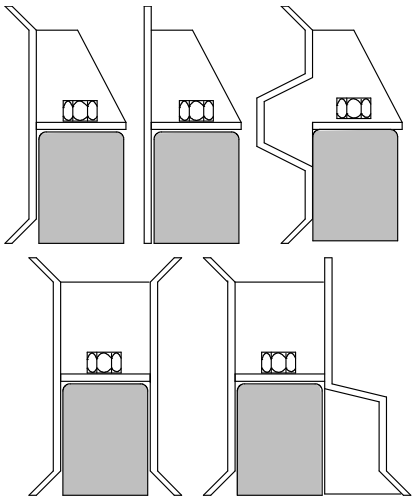

H 150mm
with nail or screw
holes for attaching
wooden boards

# *BGW*-formwork system type HM13 – *length balancing 1* 09/00(01/01)

For ceiling plates – and double wall production

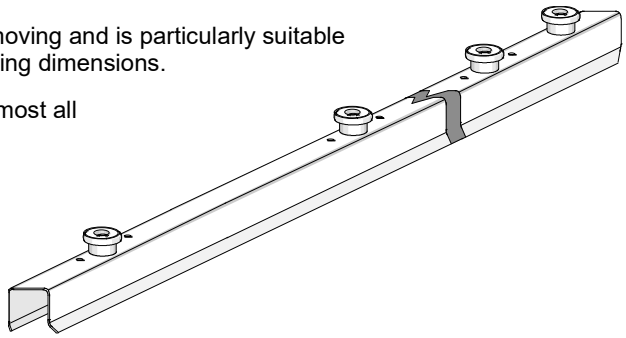

This variable formwork system is used as stoppers against side-moving and is particularly suitable for production of precast concrete elements with frequently changing dimensions.

By the length balancing elements available in different lengths, almost all precast elements dimensions can be produced.

By the simple and control mechanism which can be handled fast, much time and also costs can be saved.

The profiles can be hang in at the shuttering with the control mechanism or blind button, that they will be easy to clean.

*Dimensions, particularly for your production requirements, you receive on request..*

**Strucutre possibilities on production-pallet.**

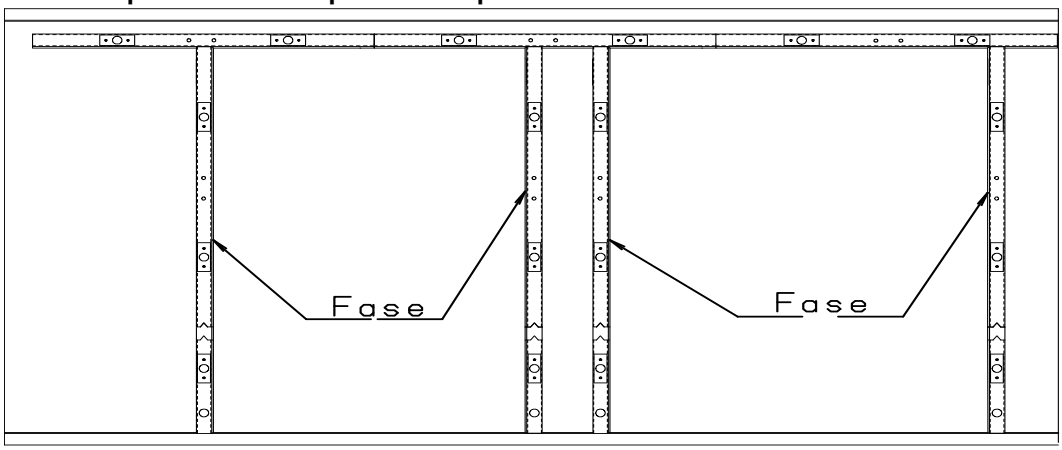


**Profile type HM13 with two magnet elements**

1 gable-end with chamfers 10x45° / 1 gable-end “mother” or “father”

| art-no. | chamfers | gable-end | length mm | weight kg | price €/piece |
|---|---|---|---|---|---|
| 3860 | without | mother | | | on request |
| 3861 | one side | mother | | | |
| 3862 | both sides | mother | | | |
| 3865 | without | father | | | on request |
| 3866 | one side | father | | | |
| 3867 | both sides | father | | | |

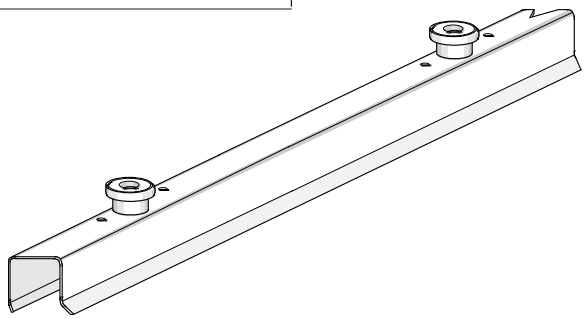

**Length balancing element made out of PU, with and without magnet**

1 gable-end „mother“ / 1 gable-end „father“

| art-no. | chamfers | magnet | length mm | weight kg | price €/piece |
|---|---|---|---|---|---|
| 3870 | without | without | | | on request |
| 3871 | one side | without | | | |
| 3872 | both sides | without | | | |
| 3875 | without | with | | | on request |
| 3876 | one side | with | | | |
| 3877 | both sides | with | | | |

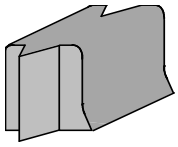

**End piece type HM13, with one magnet element and 1 blind button**

1 gable-end with chamfers 10x45° / 1 gable-end „mother“

| art-no. | chamfers | length mm | weight kg | price €/piece |
|---|---|---|---|---|
| 3880 | without | | | on request |
| 3881 | one side | | | |
| 3882 | both sides | | | |

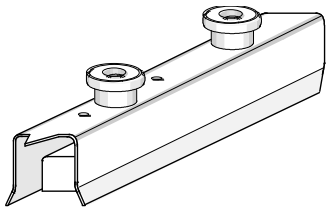

**Mounting** (to hang up the profile at the blind button)
Art.-Nr. 3390 €/piece

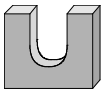

# BGW-Formwork System Type HM13 *length balancing 2* 09/00(01/01)

## for ceiling plates- and double wall production

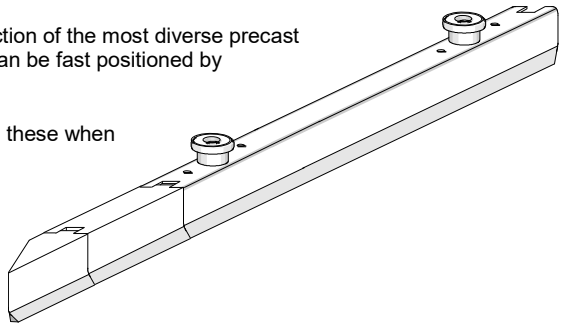

This formwork system is applicable by its various variation options for the production of the most diverse precast concrete parts. Structuring on the magnetic system HM13, the individual items can be fast positioned by the simple handling and can be fixed safely against slipping sideways.

Into the length balancing items made out of PU, magnets are cast in, which fixes these when compressing the concrete.

By the recesses at the faces, the magnet can be stacked easily and on closest space in a magazine.

*Dimensions, particularly for your production requirements, you receive on request.*

### Construction options on a production pallet

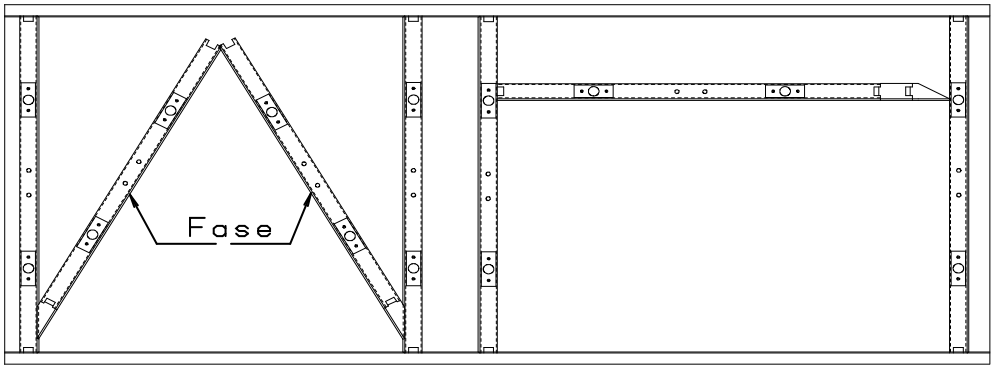


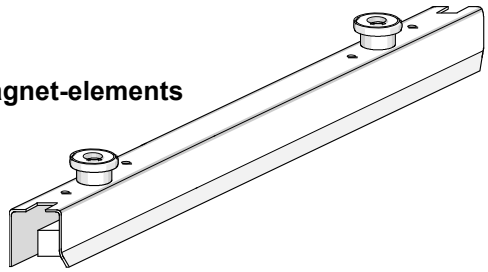

### Magnet-Profile Type HM13, with two magnet-elements

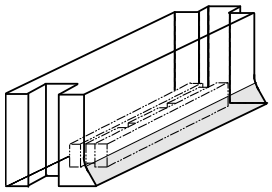

### Length balancing element, made of PU, with magnet

| art.-no. | chamfers | length mm | €/piece |
|---|---|---|---|
| 3820 | without | 10 | |
| 3821 | one side | 10 | |
| 3822 | both sides | 10 | |
| 3824 | without | 20 | |
| 3825 | one side | 20 | |
| 3826 | both sides | 20 | |
| 3828 | without | 25 | |
| 3829 | one side | 25 | |
| 3830 | both sides | 25 | |
| 3832 | without | 40 | |
| 3833 | one side | 40 | |
| 3834 | both sides | 40 | |
| 3836 | without | 80 | |
| 3837 | one side | 80 | |
| 3838 | both sides | 80 | |
| 3840 | without | 160 | |
| 3841 | one side | 160 | |
| 3842 | both sides | 160 | |

### End piece for fixing at steel formwork, made of PU

with magnet on gable-end, to forming exact edges

| art.-no. | negativ chamfers gable-end | positiv chamfers lateral | weight kg | price €/piece |
|---|---|---|---|---|
| 3800 | with | left | 0,140 | 25,56 |
| 3801 | without | left | 0,140 | 25,56 |
| 3802 | with | right | 0,140 | 25,56 |
| 3803 | without | right | 0,140 | 25,56 |
| 3804 | with | without | 0,140 | 25,56 |
| 3805 | without | without | 0,140 | 25,56 |

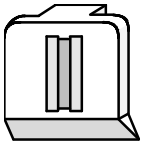

### Angle end piece for fixing at steel formwork, made of PU, with magnet

| art.-no. | Triangular strip | angle | weight kg | €/piece |
|---|---|---|---|---|
| 3810 | negativ, on incline | left | 0,580 | 30,68 |
| 3811 | negativ, on incline | right | 0,580 | 30,68 |
| 3812 | positiv, on straight side | left | 0,580 | 30,68 |
| 3813 | positiv, on straight side | right | 0,580 | 30,68 |
| 3814 | without | left | 0,580 | 30,68 |
| 3815 | without | right | 0,580 | 30,68 |

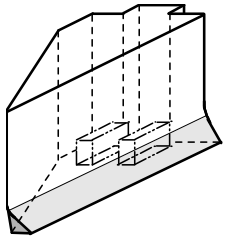

# BGW-Magnet System Type HM13 - Magnetboxes



the magnet elements are including the proofed RELEASY SYSTEM HM13. The standard modules can be easily adapted to your formwork by welding or screwing.

**Execution according to customer's request:**
Depending on the application, the base modules are provided with different structures. Furthermore, the magnetic force can be doubled by using two magnets. The prices for special bodies are available on request.

**HM13 Base Module**
**Adhesion 350kg/900kg/1300kg**

**HM13 with 2xM12 or 2xM16 thread,**
**adhesion 900kg/1300kg**

**HM13-Base Modul with or without attachment parts**

| art.no. | description | adhesion kg | length mm | width mm | height mm | weight kg | price €/piece |
|---|---|---|---|---|---|---|---|
| 32021-110 | HM13 Base Module 350 kg | 350 | 110 | 60 | 70 | 2,90 | 100,00 |
| 32021-210 | HM13 Base Module 900 kg | 900 | 210 | 60 | 70 | 3,20 | 120,00 |
| 32021-350 | HM13 Base Module 1300 kg | 1300 | 350 | 60 | 70 | 4,00 | 160,00 |
| 32022-40-280 | HM13 with 2 x threads M12/M16 | 900 | 280 | 60 | 40 | 3,50 | 140,00 |
| 32022-70-350 | HM13 with 2 x threads M12/M16 | 1300 | 350 | 60 | 70 | 3,90 | 170,00 |
| 32021-P | MH13 with side plate thickness 5mm, height 150mm | 900 | 210 | 60 | 70 | 4,50 | 140,00 |
| 320212-P | MH13 with side plate thickness 5mm, height 150mm, 2 magnets | 1800 | 210 | 60 | 70 | 6,30 | 356,00 |
| 32021-Ecke | HM13 construction for formwork corner, down device 350mm | 900 | 210 | 60 | 70 | 4,60 | 200,00 |
| 32021-Ecke2 | construction for formwork corner, down device 350mm | 1300 | 350 | 60 | 70 | 4,90 | 240,00 |

**MH13 with lateral plate**

**HM13 construction for formwork corner**

# *BGW*-Magnet System Type HM13

**HM13 with column (h350mm) and jig**

**HM13 with column (h350mm) and jig, 2 magnetes**

**HM13-Grundmodul mit Anbauteilen**

| art.-no. | description | adhesion kg | length mm | width mm | height mm | weight kg | price €/piece |
|---|---|---|---|---|---|---|---|
| 32021-FBA | HM13 with column /h350mm) an jig | 900 | 210 | 60 | 70 | 5,6 | 160,00 |
| 32021-210-116 | HM13 with column (h350mm) and jig, 2 magnetes | 1400 | 210 | 116 | 70 | 6,4 | 184,00 |
| 32021-P1 | HM13 with stop plate(d10,h200) | 900 | 210 | 60 | 70 | 4,1 | 128,00 |
| 32023-BR-SE | HM13 with claw hold-down for wood or steel profiles | 1800 | 210 | 116 | 70 | 7,4 | 145,00 |
| 32023-Howal | HM13 with side plate and stiffening ribs for preferably wooden formwork | 600 | 210 | 60 | 180 | 3,9 | 174,00 |

**HM13 with stop plate**

**HM13 with claw hold-down for wood or steel profiles**

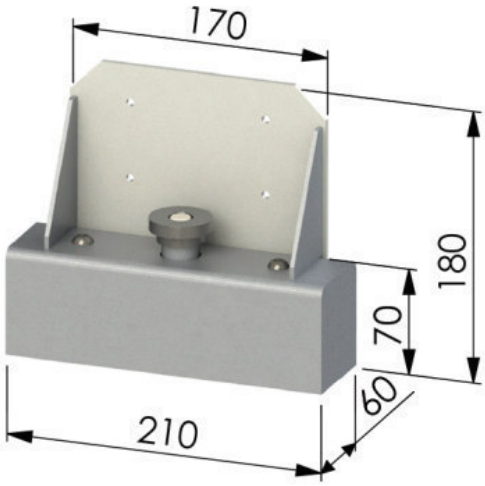


**HM13 with side plate and stiffening ribs for preferably wooden formwork**

**HM13 Transfer Lever, length 1 meter**

| art.-no. | description | €/Stück |
|---|---|---|
| 3360 | Transfer Lever | 43,46 |

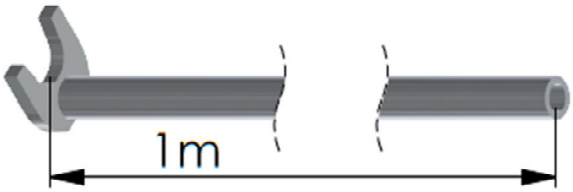

# *BGW*-Magnetbox HM13 with thread



With the magnet type HM13, wood or steel formwork can be securely fixed to the steel base during concreting. In the closed housing made of sheet steel BGW magnets are installed with adhesive forces of 800 to 2000 kg a switching mechanism. Thanks to the integrated threaded openings on the top, special attachments can be screwed on. The steel springs of the switching mechanism pull the formwork firmly against the base area when the magnet is activated.

**Advantages / Overview:**

- high forces from 800 to 2000 kg
- switchable magnet with steel springs
- application / construction quickly exchangeable
- built-in locknuts M12/M16
- flexible application / magnetic elements can be used for different formwork
- special attachments on request

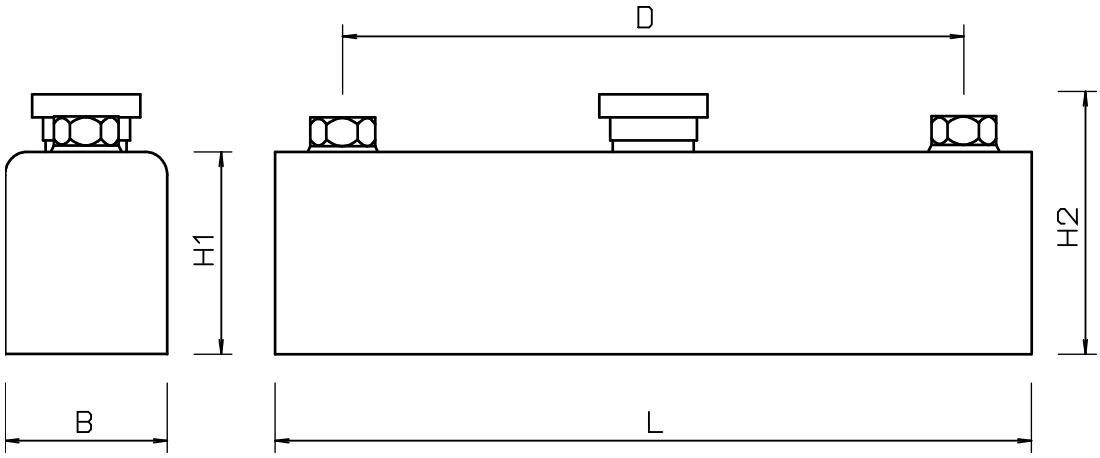


***BGW*-Magnetbox type HM13 with two integrated threads**

| adhesion kg | L mm | B mm | H1 mm | H2 mm | D mm | weight kg | price €/piece |
|---|---|---|---|---|---|---|---|
| 800 | 210 | 60 | 70/60 | 90/80 | 160 | 2,80 | 130,00 |
| | 280 | 60 | 40 | 60 | 230 | 2,60 | 140,00 |
| 1100 | 350 | 60 | 70 | 90 | 300 oder 230 | 4,00 | 170,00 |
| 1100 | 420 | 60 | 70 | 90 | 370 | 4,80 | 175,00 |
| 1600 | 210 | 120 | 70 | 90 | 160 | 3,40 | 190,00 |
| | 280 | 120 | 40 | 60 | 230 | 3,70 | 200,00 |
| 2000 | 350 | 120 | 70 | 90 | 300 | 10,50 | 230,00 |

Delivery with suitable screws plus 3 €/piece

***BGW-HM13 magnetbox can also be supplied with other dimensions and thread M12 on request***.

# BGW-Basic Formwork with wood skin



and integrated Magnetic System HM13 – the comfortable solution

**Advantages Magnetic Systems type HM13 at a glance:**

- **very low weight**
- **simple, safe handling**
- **easy maintenance by open system**
- **change of form by loosening three screws**
- **insensitive to concrete contamination**
- **easy cleaning**
- **magnetism holds system at the switchboard**
- **spring elements pull the formwork onto the floor of the form floor and prevent penetration of the concrete under the formwork (approx.. 120kg per switch unit)**
- **spring elements support the detachment of the magnet when it is released into the rest position**
- **non-magnetic operating knob enables stacking of the shut-off profiles one above the other**
- **adhesive force approx.. 900kg, depending on substrate (steel, steel thickness, temperature, surface roughness, straightness of the substrate)**

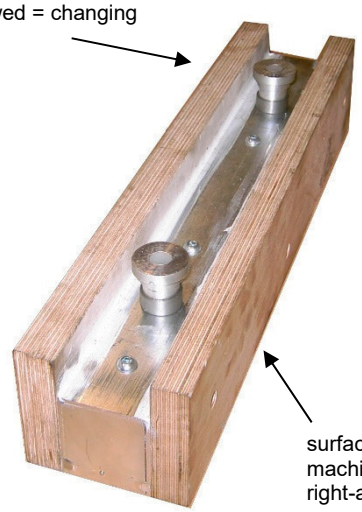


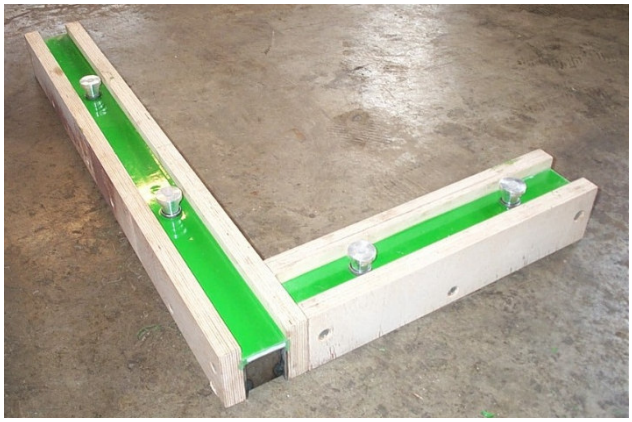

Prices: on the next site

# *BGW*-Basic Formwork with wood skin



and integrated Magnetic System HM13 – the comfortable solution

Basic Formwork 100 mm

| art.-no. | length m | no. magnets | planking no. sites | price €/piece |
|---|---|---|---|---|
| 3260-100-0250-1-1 | 0,25 | 1 | 1 | 145 |
| 3260-100-0250-1-2 | 0,25 | 1 | 2 | 170 |
| 3260-100-0500-1-1 | 0,50 | 1 | 1 | 170 |
| 3260-100-0500-1-2 | 0,50 | 1 | 2 | 198 |
| 3260-100-0500-2-1 | 0,50 | 2 | 1 | 270 |
| 3260-100-0500-2-2 | 0,50 | 2 | 2 | 298 |
| 3260-100-1000-2-1 | 1,00 | 2 | 1 | 340 |
| 3260-100-1000-2-2 | 1,00 | 2 | 2 | 378 |
| 3260-100-1500-2-1 | 1,50 | 2 | 1 | 410 |
| 3260-100-1500-2-2 | 1,50 | 2 | 2 | 458 |
| 3260-100-2000-2-1 | 2,00 | 2 | 1 | 480 |
| 3260-100-2000-2-2 | 2,00 | 2 | 2 | 538 |
| 3260-100-2500-2-1 | 2,50 | 2 | 1 | 550 |
| 3260-100-2500-2-2 | 2,50 | 2 | 2 | 618 |
| 3260-100-2500-3-1 | 2,50 | 3 | 1 | 650 |
| 3260-100-2500-3-2 | 2,50 | 3 | 2 | 718 |
| 3260-100-3000-3-1 | 3,00 | 3 | 1 | 720 |
| 3260-100-3000-3-2 | 3,00 | 3 | 2 | 800 |
| 3260-100-3500-3-1 | 3,50 | 3 | 1 | 770 |
| 3260-100-3500-3-2 | 3,50 | 3 | 2 | 860 |
| 3260-100-4000-3-1 | 4,00 | 3 | 1 | 820 |
| 3260-100-4000-3-2 | 4,00 | 3 | 2 | 980 |

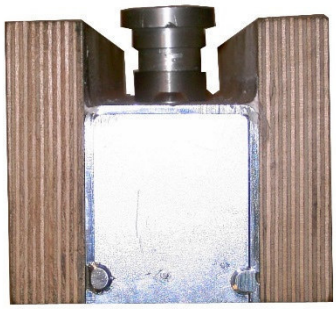

Basic Formwork 150 mm

| art.-no. | length m | no. magnets | planking no. sites | price €/piece |
|---|---|---|---|---|
| 3260-150-0250-1-1 | 0,25 | 1 | 1 | 149 |
| 3260-150-0250-1-2 | 0,25 | 1 | 2 | 174 |
| 3260-150-0500-1-1 | 0,50 | 1 | 1 | 178 |
| 3260-150-0500-1-2 | 0,50 | 1 | 2 | 206 |
| 3260-150-0500-2-1 | 0,50 | 2 | 1 | 278 |
| 3260-150-0500-2-2 | 0,50 | 2 | 2 | 306 |
| 3260-150-1000-2-1 | 1,00 | 2 | 1 | 355 |
| 3260-150-1000-2-2 | 1,00 | 2 | 2 | 393 |
| 3260-150-1500-2-1 | 1,50 | 2 | 1 | 433 |
| 3260-150-1500-2-2 | 1,50 | 2 | 2 | 481 |
| 3260-150-2000-2-1 | 2,00 | 2 | 1 | 510 |
| 3260-150-2000-2-2 | 2,00 | 2 | 2 | 568 |
| 3260-150-2500-2-1 | 2,50 | 2 | 1 | 588 |
| 3260-150-2500-2-2 | 2,50 | 2 | 2 | 656 |
| 3260-150-2500-3-1 | 2,50 | 3 | 1 | 688 |
| 3260-150-2500-3-2 | 2,50 | 3 | 2 | 768 |
| 3260-150-3000-3-1 | 3,00 | 3 | 1 | 765 |
| 3260-150-3000-3-2 | 3,00 | 3 | 2 | 845 |
| 3260-150-3500-3-1 | 3,50 | 3 | 1 | 823 |
| 3260-150-3500-3-2 | 3,50 | 3 | 2 | 913 |
| 3260-150-4000-3-1 | 4,00 | 3 | 1 | 880 |
| 3260-150-4000-3-2 | 4,00 | 3 | 2 | 980 |

Basic Formwork 200 mm

| art.-no. | length m | no. magnets | planking no. sites | price €/piece |
|---|---|---|---|---|
| 3260-200-0500-1-1 | 0,50 | 1 | 1 | 190 |
| 3260-200-0500-1-2 | 0,50 | 1 | 2 | 215 |
| 3260-200-0500-2-1 | 0,50 | 2 | 1 | 290 |
| 3260-200-0500-2-2 | 0,50 | 2 | 2 | 318 |
| 3260-200-1000-2-1 | 1,00 | 2 | 1 | 380 |
| 3260-200-1000-2-2 | 1,00 | 2 | 2 | 408 |
| 3260-200-1500-2-1 | 1,50 | 2 | 1 | 470 |
| 3260-200-1500-2-2 | 1,50 | 2 | 2 | 508 |
| 3260-200-2000-2-1 | 2,00 | 2 | 1 | 560 |
| 3260-200-2000-2-2 | 2,00 | 2 | 2 | 608 |
| 3260-200-2500-2-1 | 2,50 | 2 | 1 | 650 |
| 3260-200-2500-2-2 | 2,50 | 2 | 2 | 708 |
| 3260-200-2500-3-1 | 2,50 | 3 | 1 | 750 |
| 3260-200-2500-3-2 | 2,50 | 3 | 2 | 808 |
| 3260-200-3000-3-1 | 3,00 | 3 | 1 | 840 |
| 3260-200-3000-3-2 | 3,00 | 3 | 2 | 908 |
| 3260-200-3500-3-1 | 3,50 | 3 | 1 | 910 |
| 3260-200-3500-3-2 | 3,50 | 3 | 2 | 1.000 |
| 3260-200-4000-3-1 | 4,00 | 3 | 1 | 980 |
| 3260-200-4000-3-2 | 4,00 | 3 | 2 | 1.080 |

**Standard width Basic Formwork: 120mm (e.g. +20mm wood pannel each site)**
**Standard magnet: ca. 900kg adhesive force**
Surcharge on adhesive force 1300 kg: 20 € / piece

Different plank heights on request

# *BGW*-Basic Formwork with wood skin and top part

and integrated Magnetic System HM13 – the comfortable solution

Basic Formwork 100 mm

| art.-no. | length m | price €/piece |
|---|---|---|
| 3261-100-0250 | 0,25 | on demand |
| 3261-100-0500 | 0,5 | |
| 3261-100-1000 | 1,0 | |
| 3261-100-1500 | 1,5 | |
| 3261-100-2000 | 2,0 | |
| 3261-100-2500 | 2,5 | |
| 3261-100-3000 | 3,0 | |
| 3261-100-3500 | 3,5 | |
| 3261-100-4000 | 4,0 | |

Basic Formwork 150 mm

| art.-no. | length m | price €/piece |
|---|---|---|
| 3261-150-0250 | 0,25 | on demand |
| 3261-100-0500 | 0,5 | |
| 3261-100-1000 | 1,0 | |
| 3261-100-1500 | 1,5 | |
| 3261-100-2000 | 2,0 | |
| 3261-100-2500 | 2,5 | |
| g3261-100-3000 | 3,0 | |
| 3261-100-3500 | 3,5 | |
| 3261-100-4000 | 4,0 | |

# *BGW*-Basic Formwork with wood skin - Supplys



connection elements for basic formwork: 40€

Integrated coupling element

coupling element

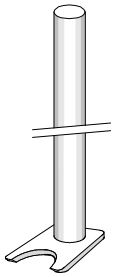

Lever
length 1 m
43,46 € /piece

# *BGW*-Basic Formwork with wood skin and bit on top



The Basic Formwork can be used as a universal formwork beam with integrated magnets for almost all formwork requirements in the precast concrete section:

- **Plates and wall production**
- **Rod parts (pillar / truss beam**
- **Sandwich and massive walls**

**Specifications at a glance:**

- Easy to use: Shawl panel fix, shift and magnet activation
- Quick change of height by replacing the formwork panels
- Basic Formwork can also be used without attachment
- Height of 100mm can be extended with a tower formwork by 200/250mm
- Total width Basic Formwork One-sided design: 150mm
- Total width Basic Formwork Two-sided design: 180mm
- Basic Formwork prepared for the installation of additional attachments
- Length from 2000mm on request with eyelets for crane hooks

## *BGW*-Formwork System HM13 with wood skin

Version with one-sided composite panels

| art.-no. | length mm | magnet piece | price €/piece |
|---|---|---|---|
| 3261-100-0500 | 500 | 2 | 240,50 |
| 3261-100-1000 | 1000 | 2 | 351,00 |
| 3261-100-1500 | 1500 | 2 | 416,00 |
| 3261-100-2000 | 2000 | 2 | 481,00 |
| 3261-100-2500 | 2500 | 3 | 611,00 |
| 3261-100-3000 | 3000 | 3 | 676,00 |
| 3261-100-4000 | 4000 | 4 | 845,00 |

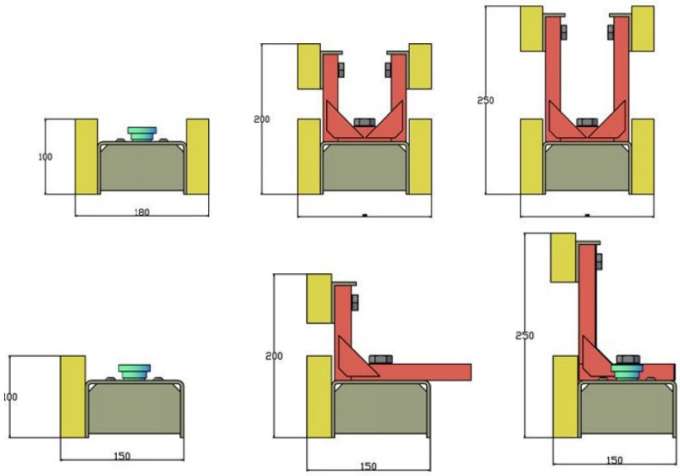


## Formwork increase for BGW-Formwork System with wood skin

Delivery incl. angle (lacquered) and mounting screws

| art.-no. | length mm | angle piece | price €/piece |
|---|---|---|---|
| 3261-A-0500 | 500 | 2 | 61,75 |
| 3261-A-1000 | 1000 | 3 | 104,00 |
| 3261-A-1500 | 1500 | 4 | 123,50 |
| 3261-A-2000 | 2000 | 4 | 169,00 |
| 3261-A-2500 | 2500 | 4 | 191,75 |
| 3261-A-3000 | 3000 | 6 | 253,50 |
| 3261-A-4000 | 4000 | 7 | 318,50 |

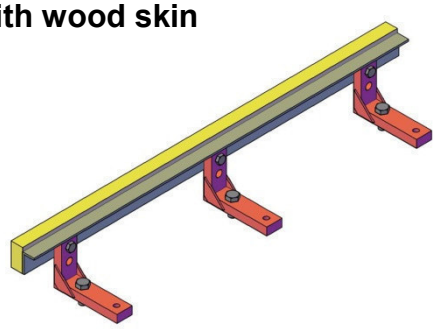

## Example equipment for a tipping table:

Set base formwork

Basic Formwork 100 mm incl. attachment (200/250 mm)

| quantity piece | length mm | price incl. attachment €/piece |
|---|---|---|
| 2 | 4000 | 1.163,50 |
| 2 | 3000 | 929,50 |
| 2 | 2000 | 650,00 |
| 2 | 1000 | 455,00 |
| 2 | 500 | 302,25 |

**Total cost / table: 7.000,50 €**

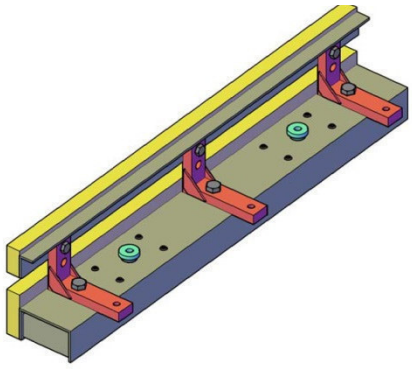

# *BGW*-Magnetic Holder Pocket Former

12/16(12/06)

This device, for eliminating breakthroughs in precast concrete parts, consists of a conical steel housing with built-in magnetic clamping mechanism, which is easy and safe to operate with the foot.

The downwardly open recess body has a flat footprint and is positively drawn by the clamping mechanism on the formwork floor, whereby the penetration of liquid concrete and thus the formation of unsightly edges is prevented with protruding noses.

With the help of the appropriate release lever, the system can be easily detached from the formwork floor and easily removed by the conical shape, with corresponding flow properties of the concrete, after concreting and compacting. The simple and quick handling also increases the work safety.

The separate arrangement of clamping mechanism and control knob, as well as clamping mechanism and steel housing, the forces introduced during concreting steel body and magnet are absorbed forces.
The built-in biasing elements are positioned protected, making the formwork system less sensitive to contamination. **Note: Insert recess body in formwork oil before first use!**

This system is environmentally friendly (styrofoam, plastic) and reusable thanks to the steel housing.
**In case of defect, the old housing can be easily replaced by loosening 3 screws.**

Different shapes (for example, tapered upwards) and dimensions are available on request.

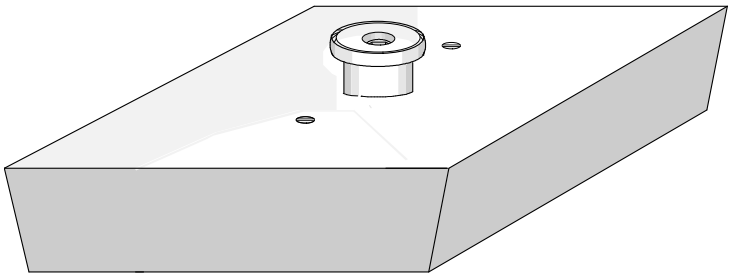

| art.-no. | width mm | length mm | hight mm | weight ca. kg | price €/piece |
|---|---|---|---|---|---|
| 3400 | 100 | 100 | 70 | 1,4 | 94,28 |
| 3402 | 150 | 150 | 70 | 2,3 | 128,33 |
| 3404 | 200 | 200 | 70 | 2,8 | 132,02 |
| 3406 | 250 | 250 | 70 | 3,4 | 136,00 |
| 3408 | 300 | 300 | 70 | 4,0 | 140,61 |
| 3410 | 350 | 350 | 70 | 4,8 | 145,82 |
| 3412 | 400 | 400 | 70 | 5,6 | 151,34 |
| 3414 | 100 | 150 | 70 | 2,1 | 126,49 |
| 3416 | 150 | 200 | 70 | 2,5 | 129,87 |
| 3418 | 200 | 250 | 70 | 3,1 | 133,86 |
| 3420 | 250 | 300 | 70 | 3,7 | 138,46 |

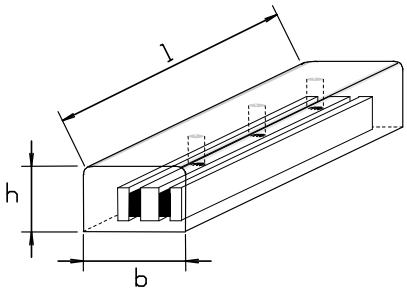


### Magnetic holder type HM13

| art.-no. | name | weight | €/piece |
|---|---|---|---|
| 3350 | magnetic holder type HM13 | 1,00 kg | 102,26 |

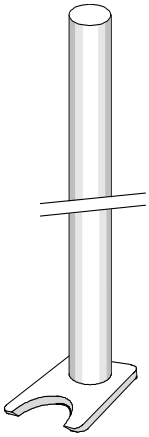

### Supply, etc.

| art.-no. | name | €/piece |
|---|---|---|
| 3360 | lever | 43,46 |
| 3365 | handle knob – antimagnetic | 7,67 |
| 3373 | tension element | 3,89 |
| 56290 | Fixing screw M 8 | 0,19 |

# BGW-Magnetic clamp type HM14

02/19(02/19)

## For electric-parts for installation

This Product allows a fast installation of electric-parts (e. g. outlet and junction boxes) on the formwork table.

**The advantages at a glance**:
- Very high magnetic force
- A clean solution (no glue necessary)
- Time saving: fast positioning
- Save hold of the box during the case of concreting, densification and hardening
- Easy remove of the magnet after concreting
- A long lifetime because of the robust material (PU + steel)
- Also adapting on special sizes

Advice: before the first application, magnets should be layd in special oil for formwork! This allows sufficient antirust protection and eases the cleaning of the magnets.

***BGW*-Magnetic Clamps** are usable for the different manufacturer:
e.g. Spelsberg, Kaiser, Legrand, Elko, Agro, Ammer, ABB, Attema, Fuga

| art.-no. | ∅ mm | height mm | chamfer Ø | adhesion Kg | price € | suitable for electric-parts |
|---|---|---|---|---|---|---|
| HM14-S2 | 61 | 26 | 68 | 70 | 73,00 | **Kaiser** Geräte-Verbindungsdose |

### *BGW*-Magnetic Holder Type HM8

This magnet system is especially suitable for fixing Spelzberg boxes on steel formwork. Despite the small size and bearing surface of this magnet reaches a tremendous adhesion. The shape of the magnet is specially adapted to those of the Spelzberg boxes and thus prevents slipping of the box. By means of the release key, which is inserted into the opening provided, the magnet can be easily removed from the box again.

| art.-no. | no. magnets | outter ∅ | price €/piece |
|---|---|---|---|
| HM8-2 | 2 | 50 | 35,79 |
| HM8-3 | 3 | 50 | 40,90 |

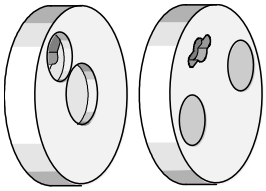

Release key for magnetic holder HM8

17,90 € / piece.

# BGW-magnetic Formwork System HM15

02/19(02/19)

## for encasing precast concrete parts of any kind

The magnetic formwork strip is used when enclosing ceiling tiles, balcony slabs, double walls, partitions, window and door frames, wall openings, openings in garage production, etc.

The two formwork surfaces of the formwork strip are made of steel, between which the magnet system, protected against formwork oil, vibrations and impacts, is cast in plastic (dimensionally stable). The bearing surfaces (adhesive surfaces) are planed at right angles to the formwork side.

When shelling, the formwork strip is magnetically attracted to the formwork base and does not float, which prevents the concrete from bleeding and achieves exact edge formation.

When peeling several strips can be sequenced without offset behind each other or put on top of each other, as they attract positive magnetically in opposite poles (1 side north pole / 1 side south pole). Laterally, e.g. Magnetic slot former be placed. The bar can be cut to the desired length with an iron saw, without damaging the magnetic adhesion (the magnetic field). To attach stiffening diagonal holes you can drill holes in the formwork.

The formwork strips are light (at a height of 70 mm 4 kg per m.) And can thus be easily transported and handled, which also increases the safety at work. The strip is smooth and without dirt-prone corners, which makes it easy to clean.

The formwork strip can be stored on top of each other by their compact design to save space, with the flat side stacked or standing side by side on the shelf.

Operation manual:
- oil the formwork strips
- put on clean shell base (at high parts T-Shaped stiffening)
- concrete prefabricated part (the top can be pulled off sharp-edged, no radii on the finished part)
- After lifting off the finished part, detach the formwork strip with the detachment fork from the formwork.

Attention: Wear gloves because of pronounced edges!

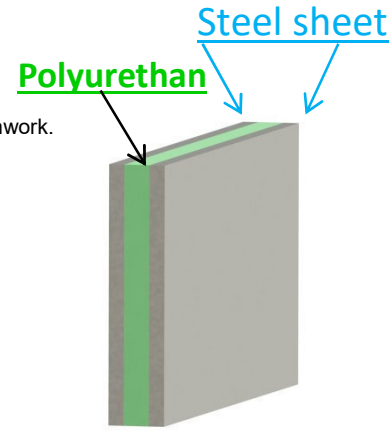


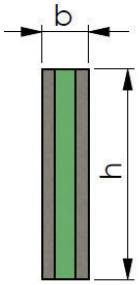


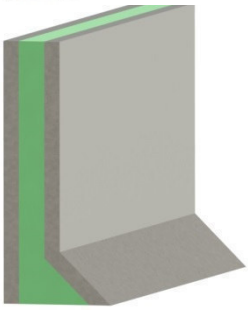

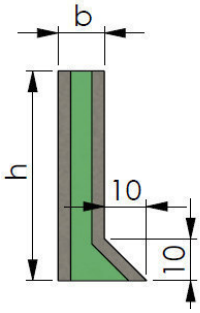


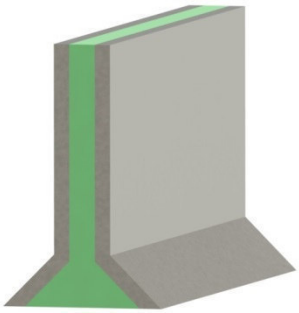

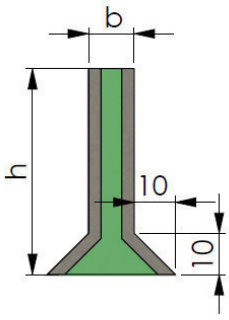


| art.-no. | height h [mm] | width b [mm] | chamfer 10x45° (standard) | price €/mtr. |
|---|---|---|---|---|
| 31000 | **50** | **11** | **without** | **102,26** |
| 31001 | 50 | 11 | one side | 104,81 |
| 31002 | 50 | 11 | both sides | 107,37 |
| 31003 | **60** | **11** | **without** | **112,48** |
| 31004 | 60 | 11 | one side | 115,04 |
| 31005 | 60 | 11 | both sides | 117,60 |
| 31006 | **65** | **11** | **without** | **117,60** |
| 31007 | 65 | 11 | one side | 117,75 |
| 31008 | 65 | 11 | both sides | 122,71 |
| 31009 | **70** | **11** | **without** | **122,71** |
| 31010 | 70 | 11 | one side | 125,27 |
| 31011 | 70 | 11 | both sides | 127,82 |
| 31012 | **75** | **11** | **without** | **127,82** |
| 31013 | 75 | 11 | one side | 130,38 |
| 31014 | 75 | 11 | both sides | 132,94 |
| 31015 | **80** | **11** | **without** | **132,94** |
| 31016 | 80 | 11 | one side | 135,49 |
| 31017 | 80 | 11 | both sides | 138,05 |
| 31018 | **100** | **11** | **without** | **143,16** |
| 31019 | 100 | 11 | one side | 145,72 |
| 31020 | 100 | 11 | both sides | 148,27 |
| 31021 | **120** | **11** | **without** | **163,61** |
| 31022 | 120 | 11 | one side | 166,17 |
| 31023 | 120 | 11 | both sides | 168,73 |
| 31024 | **140** | **11** | **without** | **184,07** |
| 31025 | 140 | 11 | one side | 186,62 |
| 31026 | 140 | 11 | both sides | 189,18 |
| 31027 | **150** | **11** | **without** | **204,52** |
| 31028 | 150 | 11 | one side | 207,08 |
| 31029 | 150 | 11 | both sides | 209,63 |
| 31030 | **180** | **11** | **without** | **224,97** |
| 31031 | 180 | 11 | one side | 227,52 |
| 31032 | 180 | 11 | both sides | 230,08 |
| 31033 | **200** | **11** | **without** | **245,42** |
| 31034 | 200 | 11 | one side | 247,98 |
| 31035 | 200 | 11 | both sides | 250,53 |

Maximum length: 4 mtr.

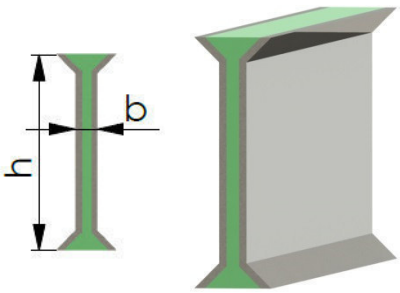


Formwork strip with both sides chamfer
- below and above -

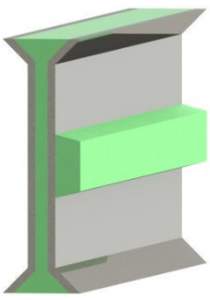

Formwork strip with laterally attached magnetic slot former

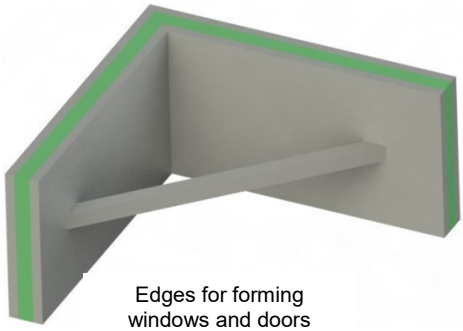

Edges for forming windows and doors

**BGW**-Bohr GmbH – 97854 Steinfeld – Tel. 09359/90950 – Fax. 09359/1640 – www.bgw-bohr.de

# *BGW*-HM16 for fixing anchor channels

06/19(06/19)

Magnet system for fastening C-shaped anchor channels to steel formwork with hammer head locking for secure connection of the anchor channel and magnet system, as well as secure adherence to the steel formwork.

The fixing system consists of a magnetic strip. The magnetic material is neodymium. The magnetic strip is cast in plastic, so that the magnet system is protected and unwanted adhesion to the rail base is avoided.

To fix the anchor channel on the steel formwork, the magnetic strip is inserted into the anchor channel with the non-adhesive side, with a screwdriver or a 5-cent piece twisted the locking element by 90 °, so that it engages behind the profile. To prevent slippage of the magnetic strip in the profile slot, the grub screw in the locking part is screwed in with a 3 mm Allen key until it reaches the anchor channel base. This then sets the magnetic strip in the anchor channel by pressing the locking element against the undercuts of the profile. On this axis, the magnet system then aligns itself to the formwork side.

It is important, before installation in the anchor channel, that the magnetic strip with a thick layer of release agent, the locking element, the thread and the grub screw with a thick layer of grease (against concrete) are protected. The magnetic strip is covered along the entire length, including anchor channel, with a thin adhesive strip, e.g. Packing tape to protect against ingress of concrete. After stripping off, remove the adhesive strips, release the magnet, allow the magnetic strip to adhere to the flat iron and remove it from the anchor rail. Keep the magnet system clean!

## *BGW*-HM16 with a lock inside
## length: 100 mm

| art.-no. | profile type | length | price €/piece |
|---|---|---|---|
| HM16-28/15K-100 | 28/15K | 100 mm | 43,00 |
| HM16-38/17K-100 | 38/17K | 100 mm | 64,00 |

## length: 125 mm

| art.-no. | profile type | length | price €/piece |
|---|---|---|---|
| HM16-HAC-20W | 20W | 125 mm | 52,00 |

## length: 150 mm

| art.-no. | profile type | length | price €/piece |
|---|---|---|---|
| HM16-28/15K-150 | 28/15K | 150 mm | 43,00 |
| HM16-38/17K-150 | 38/17K | 150 mm | 64,00 |
| HM16-40/25K-150 | 40/25K | 150 mm | 75,00 |
| HM16-49/30K-150 | 49/30K | 150 mm | 80,00 |
| HM16-50/30K-150 | 50/30K | 150 mm | 80,00 |
| HM16-53/34K-150 | 53/34K | 150 mm | 85,00 |
| HM16-72/48K-150 | 72/48K | 150 mm | 100,00 |
| HM16-40/22W-150 | 40/22W | 150 mm | 64,00 |
| HM16-50/30W-150 | 50/30W | 150 mm | 80,00 |
| HM16-53/34W-150 | 53/34W | 150 mm | 85,00 |
| HM16-72/48W-150 | 72/48W | 150 mm | 100,00 |
| HM16-HAC-30W-150 | 30W | 150 mm | 82,00 |
| HM16-HAC-40W-150 | 40W | 150 mm | 82,00 |
| HM16-HAC-50W-150 | 50W | 150 mm | 82,00 |

## length: 200 mm

| art.-no. | profile type | length | price €/piece |
|---|---|---|---|
| HM16-28/15K | 28/15K | 200 mm | 46,00 |
| HM16-38/17K | 38/17K | 200 mm | 66,00 |
| HM16-40/25K | 40/25K | 200 mm | 77,00 |
| HM16-49/30K | 49/30K | 200 mm | 82,00 |
| HM16-50/30K | 50/30K | 200 mm | 82,00 |
| HM16-53/34K | 53/34K | 200 mm | 87,00 |
| HM16-72/48K | 72/48K | 200 mm | 102,00 |
| HM16-40/22W | 40/22W | 200 mm | 66,00 |
| HM16-50/30W | 50/30W | 200 mm | 82,00 |
| HM16-53/34W | 53/34W | 200 mm | 87,00 |
| HM16-72/48W | 72/48W | 200 mm | 102,00 |
| HM16-HAC-30W | 30W | 200 mm | 84,00 |
| HM16-HAC-40W | 40W | 200 mm | 84,00 |
| HM16-HAC-50W | 50W | 200 mm | 84,00 |

## *BGW*-HM16 with two latches outside
## length: 240 mm

| art.-no. | profile type | length | price €/piece |
|---|---|---|---|
| HM16-28/15K2-240 | 28/15K | 240 mm | 65,00 |
| HM16-38/17K2-240 | 38/17K | 240 mm | 85,00 |
| HM16-40/25K2-240 | 40/25K | 240 mm | 96,00 |
| HM16-49/30K2-240 | 49/30K | 240 mm | 101,00 |
| HM16-50/30K2-240 | 50/30K | 240 mm | 101,00 |
| HM16-53/34K2-240 | 53/34K | 240 mm | 106,00 |
| HM16-72/48K2-240 | 72/48K | 240 mm | 111,00 |
| HM16-40/22W2-240 | 40/22W | 240 mm | 96,00 |
| HM16-50/30W2-240 | 50/30W | 240 mm | 101,00 |
| HM16-53/34W2-240 | 53/34W | 240 mm | 106,00 |
| HM16-72/48W2-240 | 72/48W | 240 mm | 111,00 |
| HM16-HAC-20W2-240 | 20W | 240 mm | 72,00 |
| HM16-HAC-30W2-240 | 30W | 240 mm | 104,00 |
| HM16-HAC-40W2-240 | 40W | 240 mm | 104,00 |
| HM16-HAC-50W2-240 | 50W | 240 mm | 104,00 |

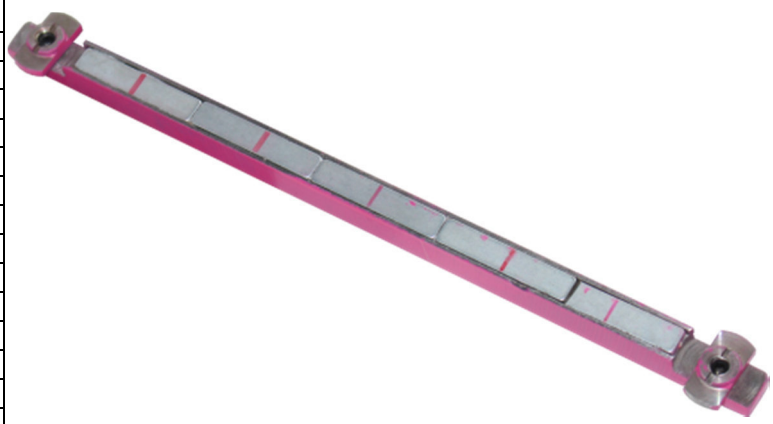

# *BGW*-holding magnet type HM17

09/15(09/15)

The BGW magnetic holding system HM17 is used to fasten various built-in parts such as reinforcement connections or connecting loops by magnetic force.

The advantages at a glance:
- clean attachment of built-in parts
- no glue needed anymore
- high adhesion
- positioning the installation parts
- no more slipping
- use with commercial drill
- also suitable for thin sheet metal boxes

## *BGW*-Sawtooth magnet HM17

This product is used to attach rebar connections to steel formwork. The innovative combination of hole saw, clamping thread and magnet eliminates the need for traditional and time-consuming bonding methods

| art.-no. | Ø mm | magnetic insert | adhesion kg | price €/piece |
|---|---|---|---|---|
| HM17-35 Säge | 35 | 5 | 25 | 63,00 |
| HM17-65 Säge | 65 | 5 | 80 | 78,00 |

## drilling drive axle – universal for both sizes

**with 6 mm hexagon**

| art.-no. | price €/piece |
|---|---|
| HM17-Antrieb | 18,00 |

## *BGW*-holding magnet type HM17 – Innovative magnetic solution from *BGW*

For fastening connecting rails to steel formwork
The company BGW-Bohr GmbH, Steinfeld, Germany, has developed a novel magnet system for fastening castings such as reinforcement connections or connecting loops on at least partially ferromagnetic formwork. Years ago, BGW was able to establish itself on the market as a competent partner of the precast concrete industry. The product range spans from traditional transport anchorage techniques to customer-specific special products to complete formwork concepts for the production of finished parts. Furthermore, we keep attracting attention with innovative solutions, all of which aim to make production in the precast plants even more efficient and profitable.

In every concrete plant the visitor still has the same picture: Various methods are used to fix re-bending connections, connecting loops, connecting rails or other castings to the formwork. Although attachment methods such as gluing or nailing have been used for years, they also carry some disadvantages that should not be underestimated. Nailing or screwing, for example, is problematic in steel formwork, and the rails and cladding are damaged by nailing. An alternative is to glue with double-sided tape or hot glue, but here the formwork must be degreased and smooth. In addition, adhesive materials are expensive and can only be used once. BGW has developed a real alternative to these conventional methods with the sawing magnet
.

This is a reusable magnetic device, which is drilled by its saw teeth on the non-magnetic underside using a commercial cordless screwdriver in the covers made of plastic or sheet metal to be fastened housing. By means of the untwisted on the outside of the magnetic body thread, the Sägemanget is further sunk in the housing until a flush completion of the magnetic front surface and the formwork facing side of the component is achieved.

The potting element to be fastened can now be positioned at any point of the formwork and is securely fixed by the high adhesive force of the magnet during casting and curing. In addition, if required, several adhesive elements can be used evenly over the length of a profile. The magnet can either be removed with the casing or remains in the casting element, is subsequently removed and can be reused.

The advantages of sawing magnets are obvious:

- The attachment by means of magnet eliminates, for example, the bonding process. As a result, you will be independent of fixed gluing stations, moreover, the fixation by magnets is much more powerful

- Easy and fast handling: Magnets can be fixed with standard cordless screwdriver and released again. The universal drive shaft is suitable for all magnet diameters

- Versatile use: The sawing magnet is predestined for use with a wide variety of products, thanks to its different sizes and adhesive forces (see photos))

- Made of hardenable steel, even thin sheets can be drilled through. Furthermore, the magnet gets such a long life, which makes it an investment in the future

The product was first presented to the public during the Ulmer Betontage 2003. The quite positive reactions of the visitors were underlined by statements that ranged from "smart" to "ingenious".

Like almost all BGW products, this is also produced on the company's own production facilities. This makes it possible to respond to special customer requests at short notice.

# BGW-Magnetic Clamp Type HM18



Very light and ergonomic formed magnet out of the solid material PU.

The BGW-Magnetic Clamp HM18 qualifies especially for fixing the form work out of wood and steel during the production of the concrete components as well as for the in-situ concrete form work. Recesses for the windows and for the doors out of wood or steel can be fixed safety for material move away. With the help of the nail holes in the front of the magnet you can screw the wooden form work tight resp. you can nail it and fix it square to the ground of the formwork. The integrated handle allows a safe and easy positioning and removing of the magnets.

The used plastic PU is signalized by very slim weight, smooth surface and doesn't swell out during the concreting.

Application advice: magnetic elements should be inlayed in special oil for the formworks before its first use. Furthermore you can increase the lift time by cleaning it after every use and treating special oil for the formworks after the event of concreting.

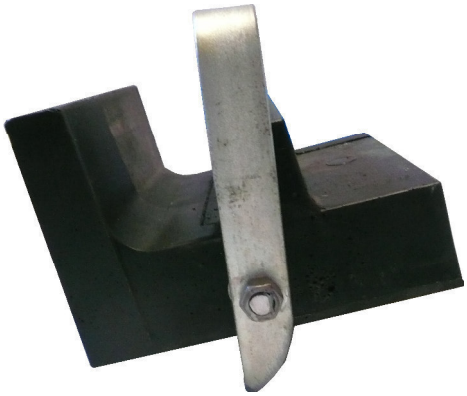

**Advantages at a glance:**

- **Very slim weight ca. 1,6 kg**
- **Different adhesive force**
- **Robust magnet body**
- **No danger of sharp edges**
- **Easy handling**
- **Only bottom is magnetic**
- **High industrial safety**
- **Low maintenance**
- **Form consistent**
- **Poor adhesion, plain surface**

| art.-no. | adhesive force kg | dimension / mm | | | | price € / piece |
|---|---|---|---|---|---|---|
| | | H1 | H2 | B | L | |
| HM18-1-100 | 100 | 95 | 40 | 120 | 140 | 73,00 |
| HM18-1-150 | 150 | 95 | 40 | 120 | 140 | 86,00 |
| HM18-1-300 | 300 | 95 | 40 | 120 | 140 | 99,00 |

*Special sizes on demand, e. g. H1=135 mm – with a minimum purchase of 20 pieces.*

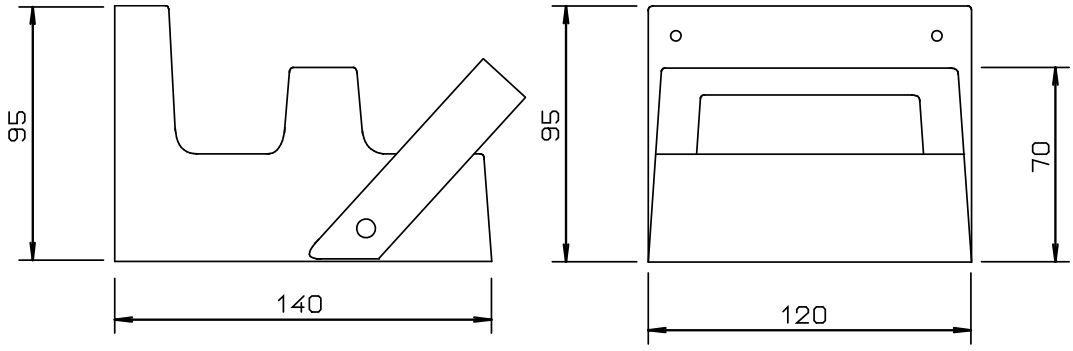

# BGW-Formwork System Type HM19

05/16(05/16)

The HM19 product family - the lightweights with the high adhesive power of BGW magnets for concrete formwork. The comfort solution.

The flexible magnet systems are used in the concrete precast plant for enclosing walls, stairs, etc. in steel formwork, in order to avoid welding the formwork to the steel shell floor and to enable the transition between steel and wooden formwork.

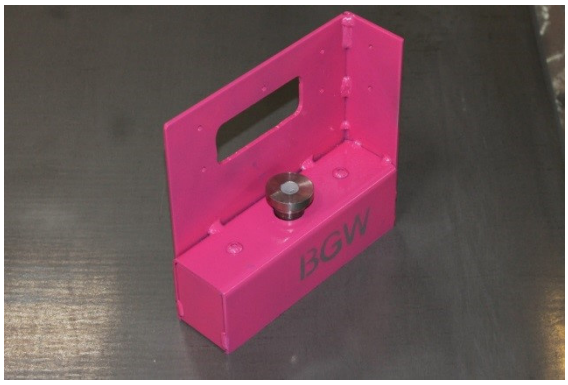


*The difference from the HM19 to other magnet systems is the weight difference between the adhesive force and the own weight of the magnet system.*
*now: ca. 1 kg magnet > 1000 kg adhesion*
*before: ca. 10 kg magnet > 1000 kg adhesion.*

The advantage of the magnet system HM19: high adhesion, less weight and less space requirement.

The incinerator can easily bring a few thousand pounds of adhesive force to the formwork with one hand. For this purpose, penetrations are incorporated in the stop plate.
The incinerator positions stop plate on stop plate and can then take both magnetic boxes with one handle, without the danger that the magnet boxes can be arrested due to the magnetic attraction and the employee can be seriously injured by having their hands and fingers squeezed in between.
The BGW-HM19 magnet systems are always recessed in the formwork support and must be switched with force so that the installed magnet system can adhere to the steel formwork floor.

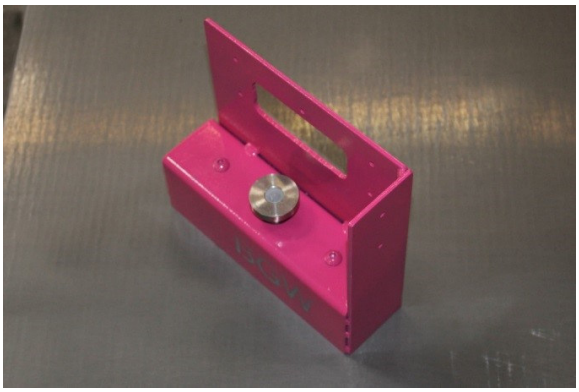

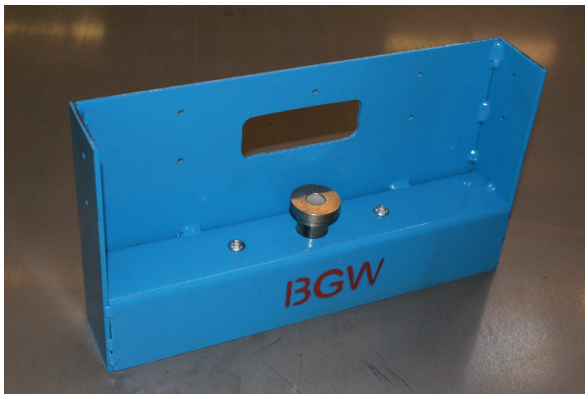

# Handling of the magnet box:



Before each switching of the magnetic boxes, the adhesive side of the magnets and the place of the steel scarf base must be metallic and flat.
Each magnetic box has at least two stop plates. One longitudinal and one transverse at right angles 90 ° to the steel scarf floor.
In the longitudinal stop plate are the passages. In both stop plates are holes for striking the longitudinal, transverse and corner formwork.
Magnetic boxes are positioned at 90 ° across the formwork to provide shear support for the formwork.
The smaller magnet boxes with a force of up to 900 kg are available in the right and left corner version, the stronger ones in the combination right / left corner version.

The formwork boxes could already be attached to the formwork in the formwork, so that the new formwork only needs to be placed on the steel shell floor and the switching knobs of the magnet boxes must be switched so that the formwork is fixed.
When switching the magnetic boxes this is tightened on the steel scarf bottom.
The magnet box does not adhere to the steel scarf bottom when placed, it can be positioned freely. Only when the button is pressed downwards with force, in the direction of the steel scarf bottom, does the magnet pass through and is with the
Steel scarf bottom magnetically connected.

# Magnet box HM19

The adhesion of the basic version, can be doubled by replacing the magnets.

| art.-no. | adhesion kg | length mm | width mm | scarf sheet height | version | price / piece |
|---|---|---|---|---|---|---|
| 32101 | 900 | 210 | 60 | 200 | R | 160,00 € |
| 32102 | 900 | 210 | 60 | 200 | L | 160,00 € |
| 32103 | 1300 | 350 | 60 | 200 | R+L | 240,00 € |
| 32104 | 1300 | 350 | 60 | 200 | R+L | 240,00 € |
| 32105 | 900 | 210 | 120 | 200 | R | 180,00 € |
| 32106 | 900 | 210 | 120 | 200 | L | 180,00 € |
| 32107 | 1800 | 210 | 120 | 200 | R | 260,00 € |
| 32108 | 1800 | 210 | 120 | 200 | L | 260,00 € |

# BGW-Magnetic Holder Type HM20



The BGW-Magnetic Holder Type HM20 is based on the basic module of the product family HM13 – the lightweight with the high adhesion strength for the concrete formwork construction.
The advantages of the magnetic system HM20: high adhesion, less weight and less space required. The comfort solution.

By lightening the adjustable toggle handles on the double column the lower holders press the formwork at the right angle on the bottom of the shell. This allows an exact set-up of the formwork on the shell at each form. The lower holder clamps are interchangeable and can be adapted to the installation

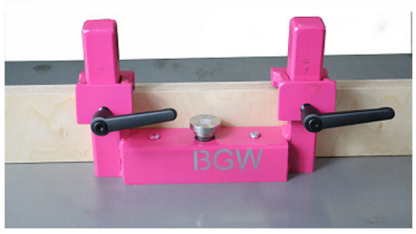


**Advantages / Overview**

- Against vertical and horizontal drifting of the formwork
- Precise angular part due to precise angled stops on the lower holders
- Eccentrically adjustable toggle handle
- Switchable magnet with steel springs
- Application/construction quickly exchangeable
- Flexible application/magnetic elements can be used for different forms

.

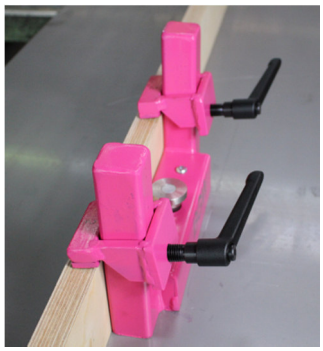

| art.-no. | adhesion kg | length mm | width mm | height mm | Exectution | price €/piece |
|---|---|---|---|---|---|---|
| 32109 | 900 | 210 | 60 | 200 | 40 x 40 | 190,00€ |
| 321010 | 900 | 210 | 60 | on demand max 450 | 40 x 40 | |
| 321011 | 1300 | 350 | 60 | 200 | 40 x 40 | 290,00€ |
| 321012 | 1300 | 350 | 60 | on demand max. 450 | 40 x40 | |
| 321013 | 900 | 210 | 120 | 200 | 40 x 40 | 230,00€ |
| 321014 | 900 | 210 | 120 | on demand max. 450 | 40 x 40 | |
| 321015 | 1800 | 210 | 120 | 200 | 40 x 40 | 310,00€ |
| 321016 | 1800 | 210 | 120 | on demand max. 450 | 40 x 40 | |

# *BGW*-HM21-E magnetic eccentric spreader



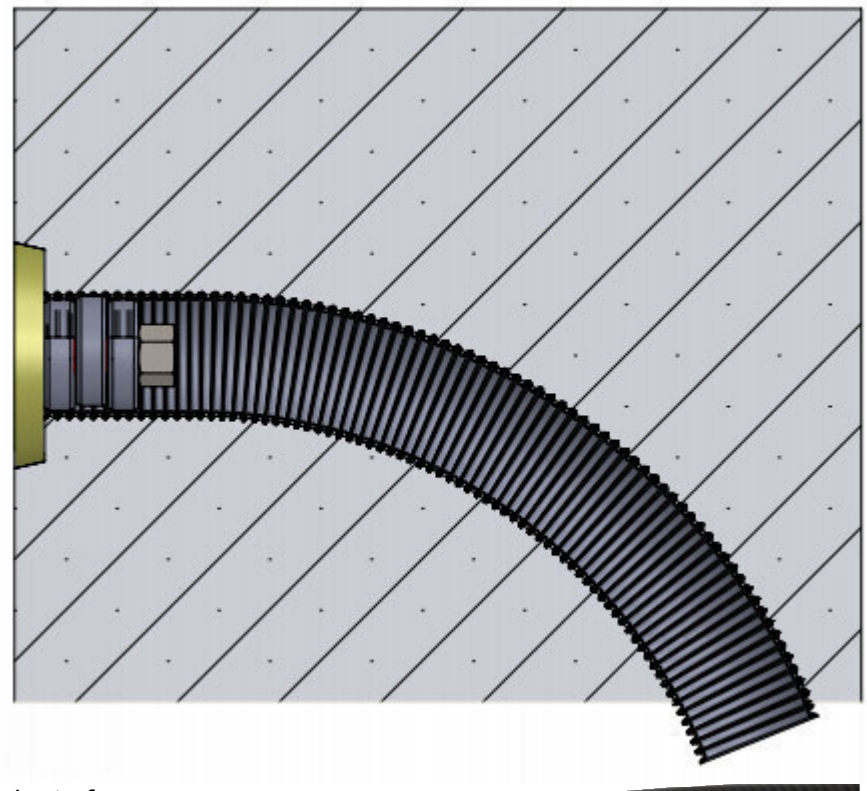

For safe holding of circular bodies, such as electric tubes, sheel corrugated tube HT and KG heating pipes, etc. from Ø 10 to 250 mm, the BGW eccentric spreader is suitable.

**How does the eccentric spreader work?**

Before use, you must protect the tool well with release agent. The pin of the eccentric spreader must be 1 to 2 mm smaller be, as the cylindrical member. You have to fix this when concreting.

**Possibilities:**
The spigot of the eccentric spreader is inserted into the component and turned with a special Allen key until the component is firmly seated on the spigot of the eccentric spreader. Now the cylindrical component with the magnetic eccentric spreader is placed on the steel formwork.

Or the BGW magnetic eccentric spreader is placed on the slot of the steel formwork. Thereafter, the fitting (pipe) is placed on the pins and the tube is rotated on the pin of the magnetic eccentric spider until it is firmly seated. After the concrete has hardened, the magnetic eccentric spreader is removed again from the concrete part.

If the magnetic eccentric spreader is in the concrete part, you can turn the spreader back to open with the special hex wrench. To do this, attach the special tool to the magnet side of the spreader and use the handle on this tool to remove the loose eccentric spreader from the component.

***Special solutions:*** *Our magnetic eccentric spreader is suitable for circular bodies with a diameter of Ø 10 - 250 mm. Ask directly for an individual solution with us.*

# *BGW* HM21-K magnetic balls clamping spreader



The magnetic clamping spreader is suitable for secure holding particularly of electrical boxes, circular bodies such as electric tubes, sheel corrugated tube, HT and KG pipes, and heating pipes, etc. from Ø 10mm to 250mm.

**How does the clamping spreader work in a flush-mounted box?**

Protect the tool well with release agent. The clamping spreader must have the shape of the flush-mounted box, which must fit on the clamping spreader. The clamping spreader is pressed onto the flush-mounted box, thereby the clamping devices are pushed back into the magnetic magnetic strut, whereby it is firmly clamped to the flush-mounted box. The same system applies to all other built-in parts, these can also have different shapes, such as. square, rectangle, also with undercuts.

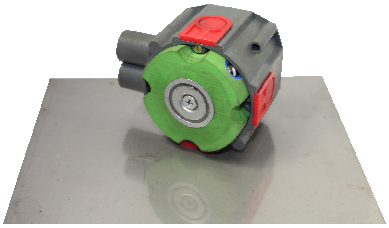

After the end shells of the component, the magnetic clamping struts must be removed with the aid of a ferritic removal tool.

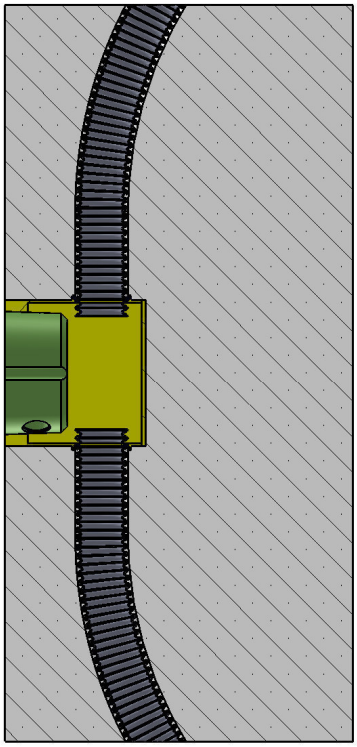

***Special solutions:*** *Our magnetic ball clamping spreader is suitable for circular bodies with a diameter of Ø 10 - 250 mm. Ask us directly for an individual solution!*

# *BGW* HM21-S shared magnetic spreader

12/17(12/17)

The BGW HM21-S is suitable for secure holding of rectangular, square, triangular, circular, hollow bodies such as all flush-mounted boxes, electric tube, corrugated pipes, HD and KG heating pipes etc. from Ø 10mm to 250mm.

**Video instruction:**
https://www.youtube.com/watch?v=cNuYdRO4-3g

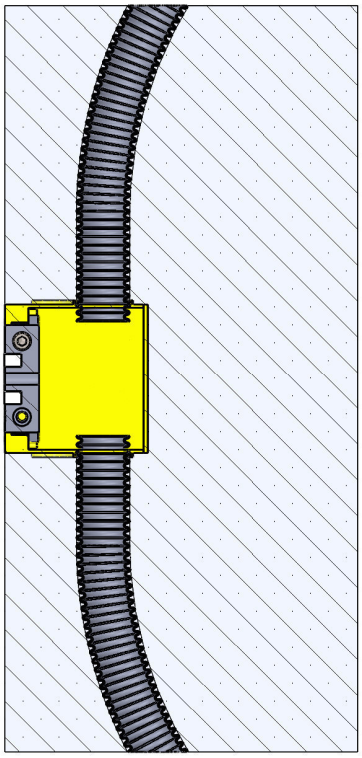

**The function of this tool!**

The body is made of plastic as well as metal.
Magnets are attached in the underside.
The body is divided, in the division are springs that push apart the body of the strut limited. When inserting in a flush-mounted box, the spreader is compressed with special pliers and built into this flush-mounted box.
The flush-mounted box with magnetic strut is placed on the steel formwork.
The magnetic strut is removed with the special pliers from the built-in flush-mounted box.

***Special solutions:*** *Our magnetic spreader is suitable for circular bodies with a diameter of Ø 10 - 250 mm. Ask directly for an individual solution with us.*

# BGW-Magnetic Clamp Type HM22

05/17(05/17)

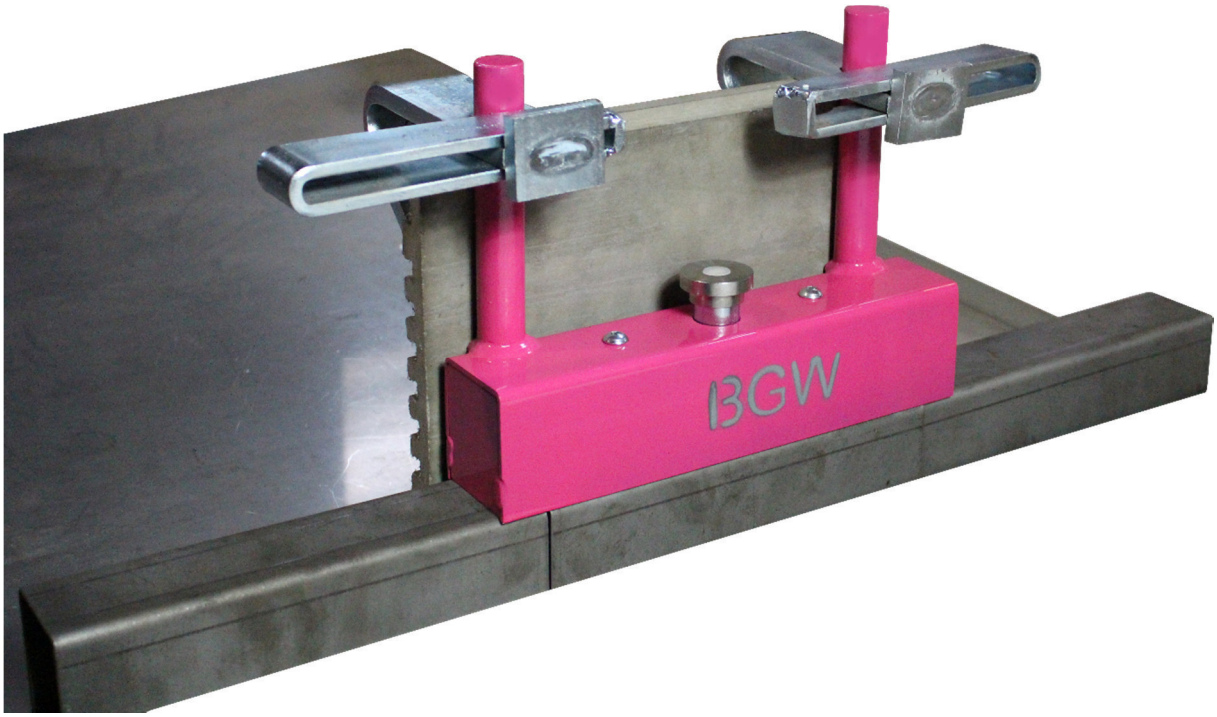


The BGW-Magnetic Clamp HM22, based at the basic module of the product line HM13 – the light weight with high adhesive force for the formwork construction. The advantage of the magnetic system HM22: high adhesion, less weight and less space required. The comfort solution.

For setting on the edge of the formwork. Thereby can the space of the formwork bottom fully used.
The clamping columns of the magnets are standing downwards, so that this generally available draft of the mold as straight will be a 90° arrester. With the 90° double columns, the formwork – fiber concrete upturn beam can be vibrations proofed using the span talon.

**Advantage/Overview**

- Against vertical and horizontal drifting of the formwork.
- Precisely angled finished parts by precise angled
- 90° impact on the holding-down columns
- Switchable magnet with steel springs
- Utilization / installation quickly exchangeable
- Flexible Utilizations / magnet elements can be used for different formworks

| art.-no. | adhesion kg | length mm | width mm | clamping high mm | price €/pcs |
|---|---|---|---|---|---|
| 32110 | 900 | 300 | 60 | 240 | 240,00 |
| 32111 | 1300 | 350 | 60 | 240 | 340,00 |

# BGW-Magnetic Clamp Type HM23

05/17(05/17)

The BGW-Magnetic Clamp Type HM23, based at the basic module of the product line HM13 – the lightweight with high adhesive force for the formwork construction. The advantage of the magnetic system HM23: high adhesion, less weight and less space required. The comfort solution.

## Advantage/Overview

- Against vertical and horizontal drifting of the formwork.
- Precisely angled finished parts by precise angled impact on the holding-down columns
- Switchable magnet with steel springs.
- Utilization / installation quickly exchangeable
- Flexible Utilizations / magnet elements can be used for different formworks.

| art.-no. | adhesion kg | length mm | width mm | clamping high mm | price €/pcs. |
|---|---|---|---|---|---|
| 32112 | 900 | 300 | 60 | 240 | 240,00 |
| 32113 | 1300 | 350 | 60 | 240 | 340,00 |

# BGW-Magnetic Systems – Tips and Hints

07/97(06/99)

* Magnet <Greek> -scarce-

The columns have to be fixed solidly with the magnetic system, to prevent bends and breaks of the column at the thread pin.

| **Error:** | **countermeasure:** |
|---|---|
| space between magnetic holder system and the form table, by mean of sand- and concrete-rest | Cleaning of the adhesion side and the form table |
| magnetic system can't be removed from the steel formwork | Tighten the tension anchor with a spanner ∅ 17 mm, then remove magnet |
| Damaged pole sheets | Smaller damages of the pole sheets can be repaired with sandpaper |

To prevent that concrete adheres at the magnetic system it is recommended to spray the upper side of the systems with separate preparation.

Please observe at handling with magnets for a sufficient distance to each other. By mean of the high adhesion, the magnetic systems can only hardly separated from each other, as soon as their adhesion side comes together.

By mean of the high adhesion power, it exists **injury danger** the handling!

Near by electronic equipment and measuring instruments can, by mean of the high field strength, be de-calibrated or damaged. Magnetic systems have to be kept in a save distance (2 m) especially to computers, TV screens and all magnetic data carriers (for example discs, credit cards, audio- and videotapes), as well as **cardiac peacemaker**.

At more questions about magnetic holder systems, we are on your disposal.

Price- and construction changes reserved. All current prices are without value added tax.

# *BGW-Magnetic Stripes*



## *BGW-Triangular stripe / -Trapezional stripe*

***BGW*-Magnetic Stripes** are available in steel and polyurethane. The magnetic adhesive force can be adjusted depending on the intended use. The maximum length of the strips is about 3m. Recommended adhesive force per meter see table. Moldings with other adhesive forces and dimensions available on request.

**Triangular stripe made of plastic, magnetic**

| art.-no. | type | a [mm] | b [mm] | c [mm] | adhension [kg/m] | weight [kg/m] | price €/m |
|---|---|---|---|---|---|---|---|
| 54007K-A | A | 7 | 7 | 10 | 12 | 0,07 | 42,00 |
| 54007K-B | B | 7 | 7 | 10 | 12 | 0,07 | 42,00 |
| 54010K-A | A | 10 | 10 | 14 | 12 | 0,13 | 42,00 |
| 54010K-B | B | 10 | 10 | 14 | 12 | 0,13 | 42,00 |
| 54015K-A | A | 15 | 15 | 21 | 12 | 0,29 | 50,00 |
| 54015K-B | B | 15 | 15 | 21 | 12 | 0,29 | 50,00 |
| 54020K-A | A | 20 | 20 | 28 | 38 | 0,51 | 57,00 |
| 54020K-B | B | 20 | 20 | 28 | 38 | 0,51 | 57,00 |
| 54025K-A | A | 25 | 25 | 35 | 38 | 0,8 | 63,00 |
| 54025K-B | B | 25 | 25 | 35 | 38 | 0,8 | 63,00 |
| 54030K-A | A | 30 | 30 | 42 | 38 | 1,16 | 91,00 |
| 54030K-B | B | 30 | 30 | 42 | 38 | 1,16 | 91,00 |

**Type A**

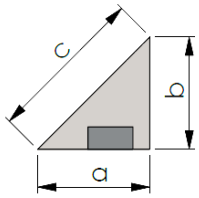


**Type B**

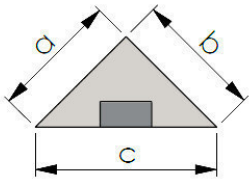


**Triangular made of steel, magnetic**

| art.-no. | type | a [mm] | b [mm] | c [mm] | adhension [kg/m] | weight [kg/m] | price €/m |
|---|---|---|---|---|---|---|---|
| 54007S-A | A | 7 | 7 | 10 | 52 | 0,19 | 41,00 |
| 54007S-B | B | 7 | 7 | 10 | 52 | 0,19 | 41,00 |
| 54010S-A | A | 10 | 10 | 14 | 64 | 0,39 | 42,00 |
| 54010S-B | B | 10 | 10 | 14 | 64 | 0,39 | 42,00 |
| 54015S-A | A | 15 | 15 | 21 | 71 | 0,88 | 50,00 |
| 54015S-B | B | 15 | 15 | 21 | 71 | 0,88 | 50,00 |
| 54020S-A | A | 20 | 20 | 28 | 88 | 1,56 | 57,00 |
| 54020S-B | B | 20 | 20 | 28 | 88 | 1,56 | 57,00 |
| 54025S-A | A | 25 | 25 | 35 | 95 | 2,40 | 63,00 |
| 54025S-B | B | 25 | 25 | 35 | 95 | 2,40 | 63,00 |
| 54030S-A | A | 30 | 30 | 42 | 142 | 3,50 | 91,00 |
| 54030S-B | B | 30 | 30 | 42 | 142 | 3,50 | 91,00 |

**Type A**

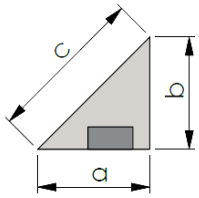


**Type B**

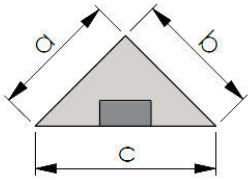


**Triangular made of plastic, indent, magnetic**

| art.-no. | a [mm] | b [mm] | c [mm] | adhension [kg/m] | weight [kg/m] | price €/m |
|---|---|---|---|---|---|---|
| 54007K-H | 7 | 7 | 10 | 12 | 0,07 | 52,00 |
| 54010K-H | 10 | 10 | 14 | 12 | 0,12 | 52,00 |
| 54015K-H | 15 | 15 | 21 | 12 | 0,27 | 60,00 |
| 54020K-H | 20 | 20 | 28 | 38 | 0,45 | 67,00 |
| 54025K-H | 25 | 25 | 35 | 38 | 0,7 | 73,00 |
| 54030K-H | 30 | 30 | 42 | 38 | 1,00 | 96,00 |

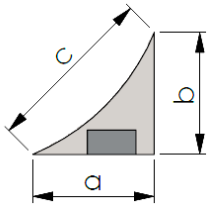


**Triangular made of steel, indent, magnetic**

| art.-no. | a [mm] | b [mm] | c [mm] | adhension [kg/m] | weight [kg/m] | price €/m |
|---|---|---|---|---|---|---|
| 54007S-H | 7 | 7 | 10 | 52 | 0,16 | 52,00 |
| 54010S-H | 10 | 10 | 14 | 64 | 0,33 | 52,00 |
| 54015S-H | 15 | 15 | 21 | 71 | 0,73 | 60,00 |
| 54020S-H | 20 | 20 | 28 | 88 | 1,30 | 67,00 |
| 54025S-H | 25 | 25 | 35 | 95 | 2,00 | 73,00 |
| 54030S-H | 30 | 30 | 42 | 142 | 2,90 | 96,00 |

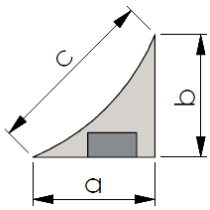

# BGW-Magnetic Stripes



## BGW-Triangular stripe / -Trapezional stripe

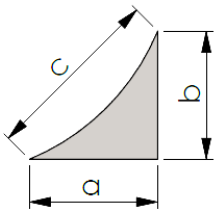


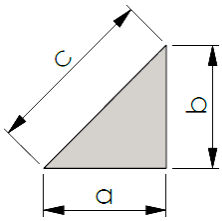


**Triangular made of steel or plastic, indent**

| art.-no. | a mm | b mm | c mm | weight [kg/m] | price €/m |
|---|---|---|---|---|---|
| 54007S-HU | 7 | 7 | 10 | 0,14 | 12,72 |
| 54007K-HU | 7 | 7 | 10 | 0,025 | 12,72 |
| 54010S-HU | 10 | 10 | 14 | 0,285 | 14,32 |
| 54010K-HU | 10 | 10 | 14 | 0,05 | 14,32 |
| 54015S-HU | 15 | 15 | 21 | 0,67 | 20,40 |
| 54015K-HU | 15 | 15 | 21 | 0,11 | 20,40 |
| 54020S-HU | 20 | 20 | 28 | 1,115 | 23,60 |
| 54020K-HU | 20 | 20 | 28 | 0,18 | 23,60 |
| 54025S-HU | 25 | 25 | 35 | 2,0 | 32,80 |
| 54025K-HU | 25 | 25 | 35 | 0,285 | 32,80 |
| 54030S-HU | 30 | 30 | 42 | 2,8 | 42,40 |
| 54030K-HU | 30 | 30 | 42 | 0,425 | 42,40 |

**Further dimensions on request!**

**Triangular made of steel or plastic**

| art.-no. | a mm | b mm | c mm | weight [kg/m] | price €/m |
|---|---|---|---|---|---|
| 5009 | 7 | 7 | 10 | 0,191 | 2,72 |
| 54007K | 7 | 7 | 10 | 0,03 | 2,72 |
| 5010 | 10 | 10 | 14 | 0,39 | 4,32 |
| 54010K | 10 | 10 | 14 | 0,063 | 4,32 |
| 5012 | 15 | 15 | 21 | 0,877 | 10,40 |
| 54015K | 15 | 15 | 21 | 0,141 | 10,40 |
| 5013 | 20 | 20 | 28 | 1,56 | 13,60 |
| 54020K | 20 | 20 | 28 | 0,252 | 13,60 |
| 5016 | 25 | 25 | 35 | 2,437 | 22,80 |
| 54025K | 25 | 25 | 35 | 0,394 | 22,80 |
| 5015 | 30 | 30 | 42 | 3,51 | 32,40 |
| 54030K | 30 | 30 | 42 | 0,567 | 32,40 |

## Type A

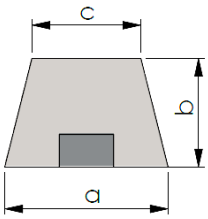


## Type B

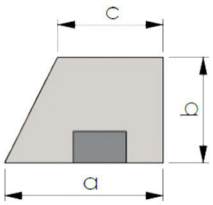


**Trapezional stripe made of plastic, magnetic**

| art.-no. | type | a mm | b mm | c mm | weight [kg/m] | price €/m |
|---|---|---|---|---|---|---|
| 541151010K-A | A | 15 | 10 | 10 | 0,321 | 61,00 |
| 541151010K-B | B | 15 | 10 | 10 | 0,321 | 61,00 |
| 541201010K-A | A | 20 | 10 | 10 | 0,385 | 68,00 |
| 541201010K-B | B | 20 | 10 | 10 | 0,385 | 68,00 |
| 541201510K-A | A | 20 | 15 | 10 | 0,578 | 72,00 |
| 541201510K-B | B | 20 | 15 | 10 | 0,578 | 72,00 |
| 541302010K-A | A | 30 | 20 | 10 | 1,027 | 78,00 |
| 541302010K-B | B | 30 | 20 | 10 | 1,027 | 78,00 |
| 541302020K-A | A | 30 | 20 | 20 | 1,284 | 81,00 |
| 541302020K-B | B | 30 | 20 | 20 | 1,284 | 81,00 |
| 541402020K-A | A | 40 | 20 | 20 | 1,541 | 87,00 |
| 541402020K-B | B | 40 | 20 | 20 | 1,541 | 87,00 |
| 541402030K-A | A | 40 | 20 | 30 | 1,75 | 93,00 |
| 541402030K-B | B | 40 | 20 | 30 | 1,75 | 93,00 |
| 541403030K-A | A | 40 | 30 | 30 | 2,697 | 98,00 |
| 541403030K-B | B | 40 | 30 | 30 | 2,697 | 98,00 |

**Trapezional stipe made of steel, magnetic**

| art.-no. | type | a mm | b mm | c mm | weight [kg/m] | price €/m |
|---|---|---|---|---|---|---|
| 541151010S-A | A | 15 | 10 | 10 | 0,975 | 61,00 |
| 541151010S-B | B | 15 | 10 | 10 | 0,975 | 61,00 |
| 541201010S-A | A | 20 | 10 | 10 | 1,170 | 68,00 |
| 541201010S-B | B | 20 | 10 | 10 | 1,170 | 68,00 |
| 541201510S-A | A | 20 | 15 | 10 | 1,755 | 72,00 |
| 541201510S-B | B | 20 | 15 | 10 | 1,755 | 72,00 |
| 541302010S-A | A | 30 | 20 | 10 | 3,12 | 78,00 |
| 541302010S-B | B | 30 | 20 | 10 | 3,12 | 78,00 |
| 541302020S-A | A | 30 | 20 | 20 | 3,9 | 81,00 |
| 541302020S-B | B | 30 | 20 | 20 | 3,9 | 81,00 |
| 541402020S-A | A | 40 | 20 | 20 | 4,68 | 87,00 |
| 541402020S-B | B | 40 | 20 | 20 | 4,68 | 87,00 |
| 541402030S-A | A | 40 | 20 | 30 | 5,46 | 93,00 |
| 541402030S-B | B | 40 | 20 | 30 | 5,46 | 93,00 |
| 541403030S-A | A | 40 | 30 | 30 | 8,19 | 98,00 |
| 541403030S-B | B | 40 | 30 | 30 | 8,19 | 98,00 |

**Further dimensions on request!**

# BGW-Triangular stripe Flexi-N

04/18(06/18)

In BGW-Triangular stripe Flexi-N, the fixed magnets have been replaced by flexible rubber neodymium strips. As a result, BGW-Tiangular stripe Flexi-N are flexible and particularly suitable for the odd edges of precast concrete elements. Furthermore, the bars can be cut to the nearest millimeter, because no solid magnets are in the way. The maximum length of the strips is about 2m..

## Type A

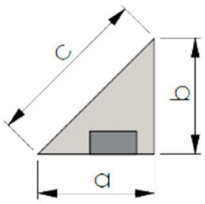


## Type B

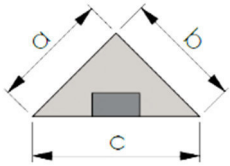


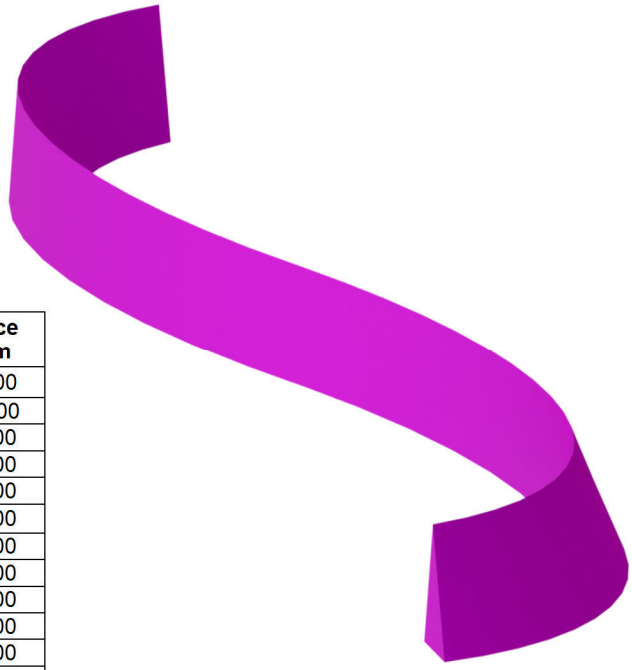

| art.-no. | type | a mm | b mm | c mm | adhesion [kg/m] | weight [kg/m] | price €/m |
|---|---|---|---|---|---|---|---|
| 54007K-AF | A | 7 | 7 | 10 | 16 | 0,07 | 42,00 |
| 54007K-BF | B | 7 | 7 | 10 | 16 | 0,07 | 42,00 |
| 54010K-AF | A | 10 | 10 | 14 | 16 | 0,128 | 42,00 |
| 54010K-BF | B | 10 | 10 | 14 | 29 | 0,128 | 42,00 |
| 54015K-AF | A | 15 | 15 | 21 | 41 | 0,288 | 50,00 |
| 54015K-BF | B | 15 | 15 | 21 | 41 | 0,288 | 50,00 |
| 54020K-AF | A | 20 | 20 | 28 | 57 | 0,514 | 57,00 |
| 54020K-BF | B | 20 | 20 | 28 | 57 | 0,514 | 57,00 |
| 54025K-AF | A | 25 | 25 | 35 | 81 | 0,8 | 63,00 |
| 54025K-BF | B | 25 | 25 | 35 | 81 | 0,8 | 63,00 |
| 54030K-AF | A | 30 | 30 | 42 | 97 | 1,156 | 91,00 |
| 54030K-BF | B | 30 | 30 | 42 | 97 | 1,156 | 91,00 |

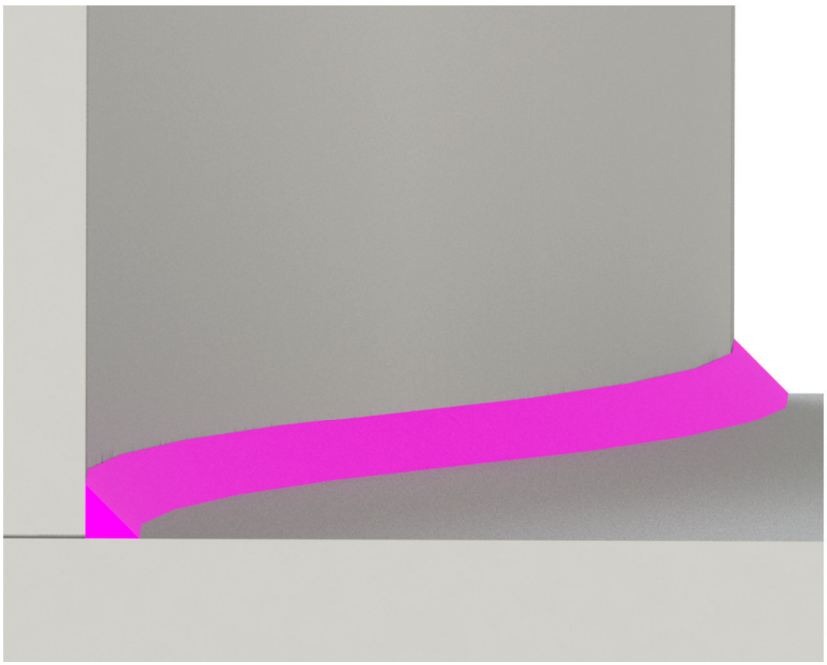

# BGW-Dummy Joint Strip
# BGW-Shadow Gap Strip

05/19(05/19)

Architectural dummy joints in the precast concrete elements also help large-scale precast concrete elements, as in the case of walls, to give the precast concrete element its own character, a face. For this purpose, we recommend **BGW dummy joint strip**. In addition to our standard profiles, special shapes are available on request.

### BGW-Dummy Joint Strip

| art.-no. | a [mm] | b [mm] | f [mm] | m [mm] | k [mm] | weight kg/m | price €/piece |
|---|---|---|---|---|---|---|---|
| 5416 | 38 | 15 | 10 | 18 | 18 | 0,7 | on demand |
| 5409 | 34 | 70 | 10 | 23 | 13 | 2,0 | |
| 5409-80 | 34 | 80 | 10 | 23 | 13 | 2,2 | |
| 5409-100 | 34 | 100 | 10 | 23 | 13 | 2,5 | |

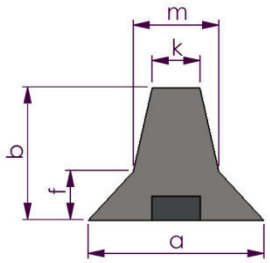


**BGW-Shadow Gap Strips** are used in the production of sandwich panels. The BGW shadow gap strips penetrates the facing shell during concreting and generates predetermined breaking points at desired points. As a result, cracks in the visible area of the attachment shell are avoided!
In the BGW-Shadow gap strip, depending on the header use shell thickness different degrees of separation of e.g. Styrofoam. After concreting separation differences are left in the joint and the parting line is closed with permanently elastic material up to the triangular bevel.

### BGW-Shadow Gap Stripe

| art.-no. | a [mm] | b [mm] | f [mm] | m [mm] | i [mm] | g [mm] | weight kg/m | price €/piece |
|---|---|---|---|---|---|---|---|---|
| 5409-27 | 36 | 27 | 10 | 17,5 | 13 | 16 | 1,7 | a.A. |

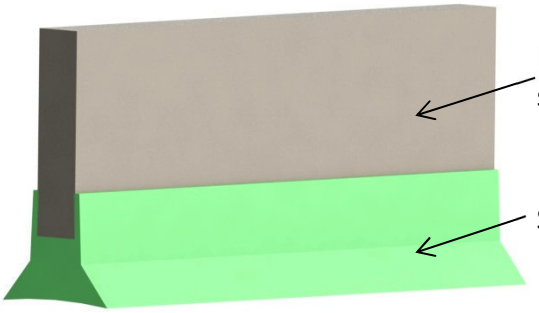


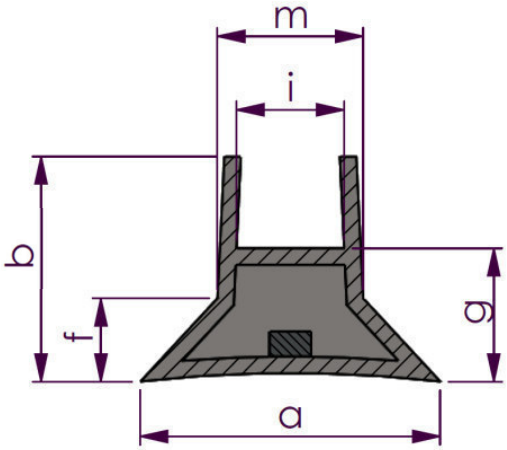


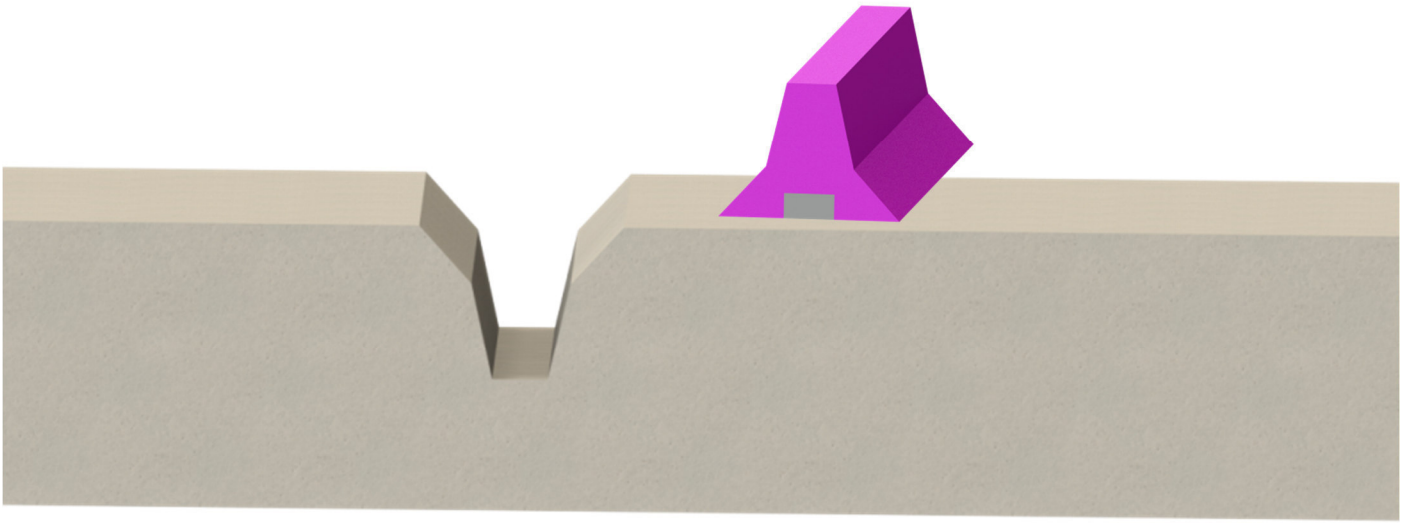

# BGW-Triangular strips made of polyethylene in „pink“

05/01(05/19)

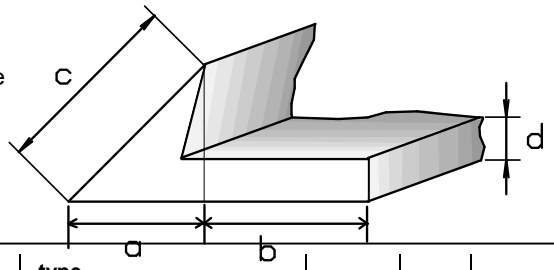


**Triangular strips with nail flags** made of reinforced polyethylene
Are in contrast to already available products:

- without heavy metals
- halogen free
- dispose of easily together with formwork boards or thermally recover in incineration plants
- flexible and bendable
- high impact strength even at low temperatures
- can be nailed quickly and conveniently with an air pressure nailer without tearing

| art.-no. | type a mm | b mm | c mm | d mm | Länge mm | PU mtr. | price €/mtr. |
|---|---|---|---|---|---|---|---|
| 5000 | 7 | 15 | 10 | 3 | 2500 | 300 | 1,30 |
| 5004 | 10 | 15 | 14 | 3 | 2500 | 250 | 1,35 |
| 5006 | 10 | 20 | 14 | 3 | 2500 | 250 | 1,40 |
| 5008 | 15 | 17 | 19 | 3 | 2500 | 150 | 1,50 |

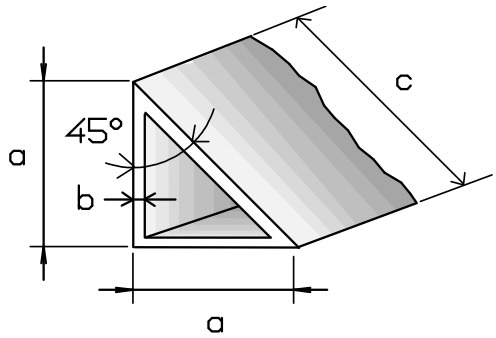


**Triangular strip** as described above,
but **without nail flag**

| art.-no. | type a mm | b mm | Länge mm | PU mtr. | price €/mtr. |
|---|---|---|---|---|---|
| 5020 | 10 | 1,0 | 2500 | 500 | 1,15 |
| 5022 | 15 | 1,5 | 2500 | 500 | 1,30 |

**VorteAdvantage of polyethylene profiles compared to PVC profiles in the thermal utilization of wood formwork**

During the incineration of PVC (polyvinyl chloride), chlorine forms hydrogen chloride (HC1) from the molecular building block, which reacts with atmospheric moisture to form hydrochloric acid. In addition to the associated environmental impact, metallic materials also suffer from strongly accelerated corrosion due to hydrochloric acid. On the other hand, during the combustion of PE (polyethylene), no hydrochloric acid can form since the polymer contains no chlorine atoms.

The legislator has with the Federal Immission Control Act (BImSchG) and the associated regulations (BImSchV) the protection against environmental hazards, e.g. due to air pollution.
The first ordinance for the implementation of the Federal Immission Control Act (1st BImSchV) is the Ordinance on Small Firing Installations. As small combustion plants, e.g. firing systems for the use of wood with a rated thermal input of less than 1 megawatt. These small combustion plants do not require a permit according to § 4 of the Federal Immission Control Act. However, the fuels permitted in small combustion plants are regulated in the 1st BImSchV (§ 3(1)).
Basically, wood in small combustion plants may only be used as fuel if they are natural (§§5, 6). For the primary wood fuels specified in § 3 (1) Nos. 6 and 7 „painted, painted or coated wood …. And plywood, chipboard, fibreboard and glued wood, as far as no wood preservatives are applied or contained and coatings do not consist of organohalogen compounds „exists the possibility of thermal utilization (§ 6 (2) 1. BImSchV).
In the above list is emphasized that coatings must not consist of organohalogen compounds. Halogens are e.g. Corridor, chlorine and bromine. For example, PVC belongs to the group of halogen-organic compounds (poly-vinyl-chloride), but not PE (poly-ethylene).

# BGW-Aussparungskörper mit Kennzeichnung

09/17(09/17)

**BGW-Pocket former with marking** for always existing and legible marking of transport anchors in concrete.

The pocket former is screwed by means of centering screw on the lifting anchor, whereby the lifting anchor is directed at right angles to the recess surface (to stop the load receiving means). The formwork stop side of the plastic and metal version are smooth, for gluing, screwing on or nailing through the threaded hole in timber formwork, or are available magnetically for steel formwork. According to the safety rules for transport anchors and systems of precast concrete components, the Federation of Professional Trade Association (section 4.3), the anchorage details indicated after stripping the hardened concrete ensure optimum identification of the transport anchor with **manufacturer, anchor type, load capacity** and additional information such as pulling direction, draw angle, the specification of dynamic forces, etc.

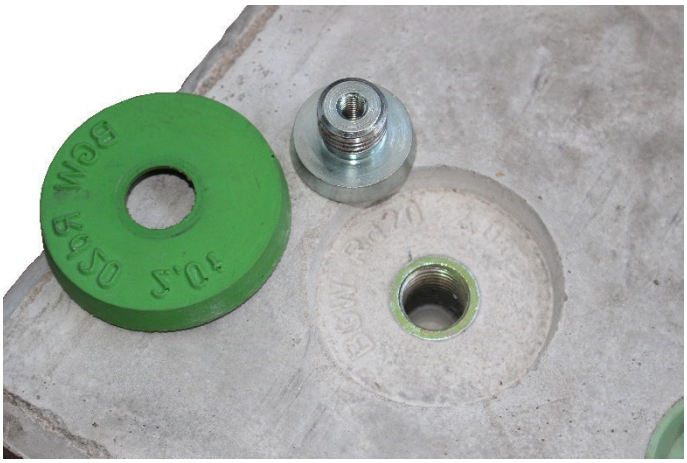

With this intelligent and quick mounting option, you can easily avoid high additional costs for marking parts as well as standstill at the construction site due to lack of safety information on the transport anchors, electrical installation, plumbing, etc..

**Note:** Before first use, place the pocket former in the formwork oil, as it has to be used several times and then deactivated again. Do not nail the pocket former to the formwork but with the centering screw.

## Plastic

| art.-no. | MRd | Ø | height h mm | price €/piece |
|---|---|---|---|---|
| 0900-12-K | 12 | 50,5 | 10 | 3,65 |
| 0900-14-K | 14 | 55,5 | 10 | 3,85 |
| 0900-16-K | 16 | 59,2 | 10 | 4,15 |
| 0900-18-K | 18 | 62,5 | 10 | 4,50 |
| 0900-20-K | 20 | 73,5 | 10 | 4,75 |
| 0900-24-K | 24 | 78,2 | 12 | 7,40 |
| 0900-30-K | 30 | 94,2 | 12 | 8,73 |
| 0900-36-K | 36 | 105,2 | 12 | 11,80 |
| 0900-42-K | 42 | 115,3 | 15 | 17,10 |
| 0900-52-K | 52 | 135,3 | 15 | 30,25 |

## Fixing Screw Pin for round Rubber Pocket Former

| art.-no. | MRd | Ø D1/mm | height plate mm | price €/piece |
|---|---|---|---|---|
| 0900-12-Z | 12 | 23,5 | 8 | 3,65 |
| 0900-14-Z | 14 | 26,5 | 8 | 3,81 |
| 0900-16-Z | 16 | 30,5 | 8 | 4,11 |
| 0900-18-Z | 18 | 33,5 | 8 | 4,47 |
| 0900-20-Z | 20 | 37,0 | 8 | 4,75 |
| 0900-24-Z | 24 | 41,0 | 9,5 | 7,40 |
| 0900-30-Z | 30 | 50,0 | 9,5 | 8,73 |
| 0900-36-Z | 36 | 59,0 | 9,5 | 11,77 |
| 0900-42-Z | 42 | 67,0 | 12 | 17,10 |
| 0900-52-Z | 52 | 81,0 | 12 | 30,22 |

## Plastic - magnetic

| art.-no. | MRd | Ø | height h mm | price €/piece |
|---|---|---|---|---|
| 0900-12-K-M | 12 | 50,5 | 10 | 17,75 |
| 0900-14-K-M | 14 | 55,5 | 10 | 19,29 |
| 0900-16-K-M | 16 | 59,2 | 10 | 20,63 |
| 0900-18-K-M | 18 | 62,5 | 10 | 21,94 |
| 0900-20-K-M | 20 | 73,5 | 10 | 25,09 |
| 0900-24-K-M | 24 | 78,2 | 12 | 29,76 |
| 0900-30-K-M | 30 | 94,2 | 12 | 35,59 |
| 0900-36-K-M | 36 | 105,2 | 12 | 42,42 |
| 0900-42-K-M | 42 | 115,3 | 15 | 51,91 |
| 0900-52-K-M | 52 | 135,3 | 15 | 74,15 |

## Sealing Plate for Fixing Screw Pin Stainless Steel

| art.-no. | MRd | Ø D1/mm | price €/piece |
|---|---|---|---|
| 0920E | 12 | Ø22 | 9,35 |
| 0902E | 14 | Ø25 | 10,60 |
| 0924E | 16 | Ø29 | 12,25 |
| 0926E | 18 | Ø32 | 13,65 |
| 0909E | 20 | Ø36 | 15,50 |
| 0928E | 24 | Ø40 | 19,95 |
| 0930E | 30 | Ø48 | 23,45 |
| 0932E | 36 | Ø58 | 29,65 |
| 0934E | 42 | Ø66 | 38,45 |
| 0936E | 52 | Ø80 | 48,40 |

# *BGW*-lifting socket

07/18(07/18)

The ***BGW*-lifting socket** are by mean of their low height and the individual fixing possibilities suitable for transportation of all kinds of precast concrete units.

For fastening to a steel formwork, ***BGW*-magnetic holders model HM4** are recommended. To guarantee the correct anchor position after casting process, ***BGW***-Holding plates, ***BGW***-Holding plates with marking or ***BGW***-HM4-Magnets have to be used.

To prevent dirt and concrete from penetrating into the thread of the socket, plastic stoppers respectively holding discs are used.

**For Information:**
The details of the metallic load of ***BGW***-lifting socket were first published on 24.01.1990 by test report M-Nr. B 1031/89 LGA Bavaria checked. The report is published on **www.BGW-Bohr.de**. Tensile tests according to DIN 50145 were carried out and due to the tensile load, which was 4 times the rated load, there was no change on the sleeve. Through tests in our own laboratory, this is also monitored today.

## Lifting socket – galvanized, chromated, round thread

| Art.no. | load [t] | thread Rd | height h [mm] | outer Ø d [mm] | thread length e [mm] | bore Ø a [mm] | package unit piece | weight kg | price € piece |
|---|---|---|---|---|---|---|---|---|---|
| 0050 | 0,5 | Rd 12 | 40 | 16 | 22 | 8 | 500 | 0,028 | 0,99 |
| 0052 | 0,8 | Rd 14 | 48 | 18 | 25 | 10,5 | 250 | 0,043 | 1,19 |
| 0054 | 1,2 | Rd 16 | 54 | 21 | 27 | 13 | 250 | 0,063 | 1,46 |
| 0056 | 1,6 | Rd 18 | 65 | 25 | 34 | 13 | 150 | 0,104 | 1,85 |
| 0058 | 2,0 | Rd 20 | 70 | 27 | 35 | 15,5 | 150 | 0,148 | 2,12 |
| 0060 | 2,5 | Rd 24 | 80 | 32 | 43 | 18 | 100 | 0,208 | 2,69 |
| 0062 | 4,0 | Rd 30 | 101 | 38 | 56 | 22,5 | 50 | 0,370 | 4,83 |
| 0064 | 6,3 | Rd 36 | 125 | 48 | 69 | 27,5 | 25 | 0,820 | 8,67 |
| 0066 | 8,0 | Rd 42 | 140 | 54 | 80 | 32 | 20 | 1,075 | 14,12 |
| 0068 | 12,5 | Rd 52 | 170 | 70 | 107 | 40 | 10 | 2,000 | 34,44 |

## Lifting socket – galvanized, chromated, metric thread

| Art.no. | load [t] | thread M | height h [mm] | outer Ø d [mm] | thread length e [mm] | bore Ø a [mm] | package unit piece | weight kg | price € piece |
|---|---|---|---|---|---|---|---|---|---|
| 0051 | 0,5 | M 12 | 40 | 16 | 22 | 8 | 500 | 0,028 | 0,99 |
| 0053 | 0,8 | M 14 | 48 | 18 | 25 | 10,5 | 250 | 0,043 | 1,19 |
| 0055 | 1,2 | M 16 | 54 | 21 | 27 | 13 | 250 | 0,063 | 1,46 |
| 0057 | 1,6 | M 18 | 65 | 25 | 34 | 13 | 150 | 0,104 | 1,85 |
| 0059 | 2,0 | M 20 | 70 | 27 | 35 | 15,5 | 150 | 0,148 | 2,12 |
| 0061 | 2,5 | M 24 | 80 | 32 | 43 | 18 | 100 | 0,208 | 2,69 |
| 0063 | 4,0 | M 30 | 101 | 38 | 56 | 22,5 | 50 | 0,370 | 4,83 |
| 0065 | 6,3 | M 36 | 125 | 48 | 69 | 27,5 | 25 | 0,820 | 8,67 |
| 0067 | 8,0 | M 42 | 140 | 54 | 80 | 32 | 20 | 1,075 | 14,12 |
| 0069 | 12,5 | M 52 | 170 | 70 | 107 | 40 | 10 | 2,000 | 34,44 |

## Lifting socket – Stainless steel, round thread

| Art.no. | load [t] | thread Rd | height h [mm] | outer Ø d [mm] | length e [mm] | bore Ø a [mm] | package unit piece | price € piece |
|---|---|---|---|---|---|---|---|---|
| 0050E | 0,5 | Rd 12 | 40 | 16 | 22 | 8 | 500 | 3,45 |
| 0052E | 0,8 | Rd 14 | 48 | 18 | 25 | 10,5 | 250 | 4,98 |
| 0054E | 1,2 | Rd 16 | 54 | 21 | 27 | 13 | 250 | 6,29 |
| 0056E | 1,6 | Rd 18 | 65 | 25 | 34 | 13 | 150 | 9,44 |
| 0058E | 2,0 | Rd 20 | 70 | 27 | 35 | 15,5 | 150 | 10,35 |
| 0060E | 2,5 | Rd 24 | 80 | 32 | 43 | 18 | 100 | 13,77 |
| 0062E | 4,0 | Rd 30 | 101 | 38 | 56 | 22,5 | 50 | 27,54 |
| 0064E | 6,3 | Rd 36 | 125 | 48 | 69 | 27,5 | 25 | 47,40 |
| 0066E | 8,0 | Rd 42 | 140 | 54 | 80 | 32 | 20 | 71,10 |
| 0068E | 12,5 | Rd 52 | 170 | 70 | 107 | 40 | 10 | 89,73 |

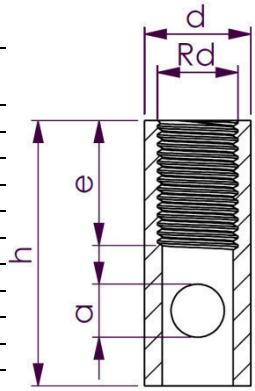


## Lifting socket – Stainless steel, metric thread

| Art.no. | load [t] | thread M | height h [mm] | outer Ø d [mm] | length e [mm] | bore Ø a [mm] | package unit piece | price € piece |
|---|---|---|---|---|---|---|---|---|
| 0051E | 0,5 | M 12 | 40 | 16 | 22 | 8 | 500 | 3,45 |
| 0053E | 0,8 | M 14 | 48 | 18 | 25 | 10,5 | 250 | 4,98 |
| 0055E | 1,2 | M 16 | 54 | 21 | 27 | 13 | 250 | 6,29 |
| 0057E | 1,6 | M 18 | 65 | 25 | 34 | 13 | 150 | 9,44 |
| 0059E | 2,0 | M 20 | 70 | 27 | 35 | 15,5 | 150 | 10,35 |
| 0061E | 2,5 | M 24 | 80 | 32 | 43 | 18 | 100 | 13,77 |
| 0063E | 4,0 | M 30 | 101 | 38 | 56 | 22,5 | 50 | 27,54 |
| 0065E | 6,3 | M 36 | 125 | 48 | 69 | 27,5 | 25 | 47,40 |
| 0067E | 8,0 | M 42 | 140 | 54 | 80 | 32 | 20 | 71,10 |
| 0069E | 12,5 | M 52 | 170 | 70 | 107 | 40 | 10 | 89,73 |

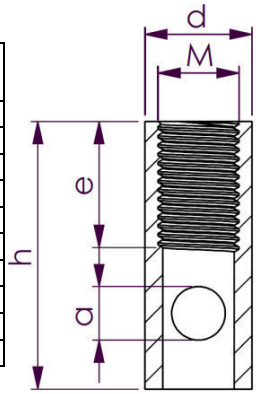

# *BGW*-cast-in lifting socket

07/18(07/18)

The ***BGW*-cast-in lifting socket** are by mean of their low height and the individual fixing possibilities suitable for transportation of all kinds of precast concrete units.

For fastening to a steel formwork, ***BGW*-magnetic holders model HM4** are recommended. To guarantee the correct anchor position after casting process, ***BGW***-Holding plates, ***BGW***-Holding plates with marking or ***BGW***-HM4-Magnets have to be used.

To prevent dirt and concrete from penetrating into the thread of the socket, plastic stoppers respectively holding discs are used.

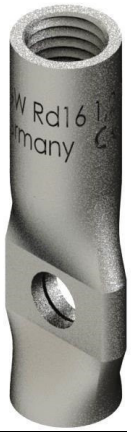


## Cast-in lifting socket – galvanized, chromated, round thread

| Art.no. | load [t] | thread Rd | height h [mm] | outer Ø d [mm] | thread length e [mm] | bore Ø a [mm] | package unit piece | weight kg | price € piece |
|---|---|---|---|---|---|---|---|---|---|
| 0850 | 0,5 | Rd 12 | 60 | 16 | 22 | 10 | 500 | 0,046 | 0,76 |
| 0869 | 0,5 | Rd 12 | 80 | 16 | 22 | 10 | 500 | 0,068 | 0,83 |
| 0852 | 1,2 | Rd 16 | 80 | 21 | 27 | 13 | 250 | 0,104 | 1,07 |
| 08521 | 1,2 | Rd 16 | 100 | 21 | 27 | 13 | 250 | 0,140 | 1,21 |
| 0854 | 2,0 | Rd 20 | 95 | 27 | 35 | 15 | 150 | 0,205 | 1,55 |
| 0855 | 2,5 | Rd 24 | 100 | 32 | 43 | 17 | 100 | 0,295 | 2,02 |
| 0856 | 2,5 | Rd 24 | 120 | 32 | 43 | 17 | 100 | 0,405 | 2,29 |
| 0864 | 4,0 | Rd 30 | 135 | 38 | 56 | 22 | 50 | 0,476 | 4,59 |
| 0858 | 4,0 | Rd 30 | 150 | 38 | 56 | 22 | 50 | 0,592 | 4,73 |

## Cast-in lifting socket – galvanized, chromated, metric thread

| Art.no. | load [t] | thread M | height h [mm] | outer Ø d [mm] | thread length e [mm] | bore Ø a [mm] | package unit piece | weight kg | price € piece |
|---|---|---|---|---|---|---|---|---|---|
| 0868 | 0,5 | M 12 | 60 | 16 | 22 | 10 | 500 | 0,046 | 0,76 |
| 0851 | 0,5 | M 12 | 80 | 16 | 22 | 10 | 500 | 0,068 | 0,83 |
| 0853 | 1,2 | M 16 | 80 | 21 | 27 | 13 | 250 | 0,104 | 1,07 |
| 0862 | 1,2 | M 16 | 100 | 21 | 27 | 13 | 250 | 0,140 | 1,21 |
| 0859 | 2,0 | M 20 | 95 | 27 | 35 | 15 | 150 | 0,205 | 1,55 |
| 0871 | 2,5 | M 24 | 100 | 32 | 43 | 17 | 100 | 0,295 | 2,02 |
| 0857 | 2,5 | M 24 | 120 | 32 | 43 | 17 | 100 | 0,405 | 2,29 |
| 0872 | 4,0 | M 30 | 135 | 38 | 56 | 22 | 50 | 0,476 | 4,59 |
| 0873 | 4,0 | M 30 | 150 | 38 | 56 | 22 | 50 | 0,592 | 4,73 |

## Cast-in lifting socket – Stainless steel, round thread

| Art.no. | load [t] | thread Rd | height h [mm] | outer Ø d [mm] | length e [mm] | bore Ø a [mm] | package unit piece | price € piece |
|---|---|---|---|---|---|---|---|---|
| 0850E | 0,5 | Rd 12 | 60 | 16 | 22 | 10 | 500 | 2,64 |
| 0869E | 0,5 | Rd 12 | 80 | 16 | 22 | 10 | 500 | 2,79 |
| 0852E | 1,2 | Rd 16 | 80 | 21 | 27 | 13 | 250 | 4,59 |
| 08521E | 1,2 | Rd 16 | 100 | 21 | 27 | 13 | 250 | 4,78 |
| 0854E | 2,0 | Rd 20 | 95 | 27 | 35 | 15 | 150 | 7,43 |
| 0855E | 2,5 | Rd 24 | 100 | 32 | 43 | 17 | 100 | 10,47 |
| 0856E | 2,5 | Rd 24 | 120 | 32 | 43 | 17 | 100 | 11,04 |
| 0864E | 4,0 | Rd 30 | 135 | 38 | 56 | 22 | 50 | 25,21 |
| 0858E | 4,0 | Rd 30 | 150 | 38 | 56 | 22 | 50 | 26,92 |

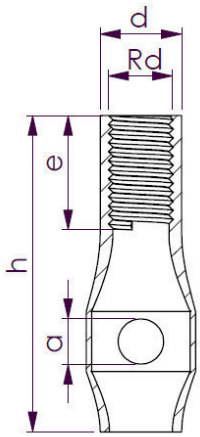


## Cast-in lifting socket – Stainless steel, metric thread

| Art.no. | load [t] | thread M | height h [mm] | outer Ø d [mm] | length e [mm] | bore Ø a [mm] | package unit piece | price € piece |
|---|---|---|---|---|---|---|---|---|
| 0868E | 0,5 | M 12 | 60 | 16 | 22 | 10 | 500 | 2,64 |
| 0851E | 0,5 | M 12 | 80 | 16 | 22 | 10 | 500 | 2,79 |
| 0830V2A | 1,2 | M 16 | 80 | 21 | 27 | 13 | 250 | 4,59 |
| 0862E | 1,2 | M 16 | 100 | 21 | 27 | 13 | 250 | 4,78 |
| 0859E | 2,0 | M 20 | 95 | 27 | 35 | 15 | 150 | 7,43 |
| 0871E | 2,5 | M 24 | 100 | 32 | 43 | 17 | 100 | 10,47 |
| 0857E | 2,5 | M 24 | 120 | 32 | 43 | 17 | 100 | 11,04 |
| 0872E | 4,0 | M 30 | 135 | 38 | 56 | 22 | 50 | 25,21 |
| 0873E | 4,0 | M 30 | 150 | 38 | 56 | 22 | 50 | 26,92 |

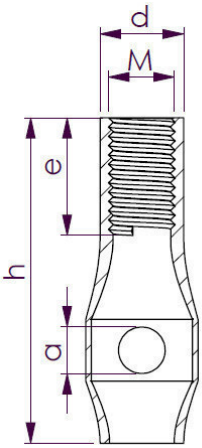

# *BGW*-fixing insert

02/17(02/17)

***BGW*-fixing inserts** are suitable by their design especially for slim precast concrete elements and for installation in thin walls, as in garages, transformer stations, manholes, etc.

A round thread (Rd) has been cut into the galvanized or stainless steel sleeve. Before installing the fixing insert in the precast concrete part, the thread should be visually inspected and greased. Round thread is particularly recommended because it is insensitive to dirt and damage compared to other types of threads.

For fixing to steel formwork, ***BGW* holding magnet type HM4** are recommended.
In order to ensure the correct seat of the anchor when installed, ***BGW*-holding plate** or ***BGW*-pocket former with marking** must be used

In order to prevent the ingress of dirt and concrete into the thread of the sleeve, **sealing plugs made of plastic** or **holding plates** are used.

The end face of the tie rods is painted to match the associated lifting loops.

*The fixing insert lengths and bar diameter can be changed to suit your particular installation case, but it must be remembered that the load level can change.*

**For information:**
The information on the metallic load was first demonstrated on 27.06.1989 in the investigation report G3-MPW 33-now-kol by the Bavarian Technical Monitoring Association. Monitoring in our own laboratory. On 07.02.1992, ***BGW*-fixing insert from Rd12 - Rd 52** were successfully tested for the first time in non-reinforced concrete bodies by destructive testing under unfavorable installation conditions. You can read the tests at ***www.BGW-Bohr.de***.

**installation instructions:**
*http://bgw-bohr.de/pdf/Einbauanleitung_QLH_DWL_DKW_SARFA.pdf*

## *BGW*-fixing insert – Sleeve galvanized and chromated

| art.-no. | load | model d x h | D mm | e mm | packing unit piece | weight kg piece | price Euro/piece |
|---|---|---|---|---|---|---|---|
| 0100 | 0,5 | Rd 12 x 190 | 16 | 22 | 200 | 0,10 | 0,77 |
| 0102 | 0,8 | Rd 14 x 230 | 20 | 25 | 100 | 0,18 | 0,92 |
| 0104 | 1,2 | Rd 16 x 250 | 22 | 27 | 50 | 0,21 | 1,15 |
| 0106 | 1,6 | Rd 18 x 300 | 25 | 34 | 50 | 0,37 | 1,71 |
| 0108 | 2,0 | Rd 20 x 350 | 27 | 35 | 25 | 0,55 | 2,10 |
| 0112 | 2,5 | Rd 24 x 400 | 31 | 43 | 25 | 0,83 | 2,81 |
| 0116 | 4,0 | Rd 30 x 500 | 38 | 56 | 1 | 1,52 | 4,19 |
| 0118 | 4,0 | Rd 30 x 900 | 38 | 56 | 1 | 2,50 | 5,01 |
| 0120 | 6,3 | Rd 36 x 650 | 48 | 69 | 1 | 3,11 | 8,05 |
| 0122 | 6,3 | Rd 36 x 900 | 48 | 69 | 1 | 4,11 | 9,33 |
| 0124 | 8,0 | Rd 42 x 800 | 54 | 80 | 1 | 4,75 | 12,83 |
| 0126-1 | 22,0 | Rd 48 x 1260 | 70 | 60 | 1 | 14,08 | 57,00 |
| 0126 | 12,5 | Rd 52 x 900 | 70 | 90 | 1 | 6,95 | 28,33 |
| 0144 | 15,0 | Rd 56 x 1200 | 70 | 80 | 1 | 13,67 | 55,00 |
| 0145 | 20,0 | Rd 60 x 1400 | 76 | 85 | 1 | 16,30 | 65,00 |

**alternative: diving achievement**
(to transport sandwich-elements)

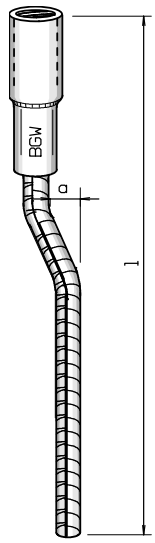


## *BGW*-fixing insert – Sleeve in stainless steel

| art.-no. | load | model d x h | D mm | e mm | packing unit piece | weight kg piece | price Euro/piece |
|---|---|---|---|---|---|---|---|
| 0100E | 0,5 | Rd 12 x 190 | 16 | 22 | 200 | 0,10 | 2,61 |
| 0102E | 0,8 | Rd 14 x 230 | 20 | 25 | 100 | 0,18 | 3,24 |
| 0104E | 1,2 | Rd 16 x 250 | 22 | 27 | 50 | 0,21 | 4,32 |
| 0106E | 1,6 | Rd 18 x 300 | 25 | 34 | 50 | 0,37 | 6,80 |
| 0108E | 2,0 | Rd 20 x 350 | 27 | 35 | 25 | 0,55 | 8,13 |
| 0112E | 2,5 | Rd 24 x 400 | 31 | 43 | 25 | 0,83 | 9,97 |
| 0116E | 4,0 | Rd 30 x 500 | 38 | 56 | 1 | 1,52 | 22,50 |
| 0118E | 4,0 | Rd 30 x 900 | 38 | 56 | 1 | 2,50 | 23,32 |
| 0120E | 6,3 | Rd 36 x 650 | 48 | 69 | 1 | 3,11 | 33,13 |
| 0122E | 6,3 | Rd 36 x 900 | 48 | 69 | 1 | 4,11 | 34,41 |
| 0124E | 8,0 | Rd 42 x 800 | 54 | 80 | 1 | 4,75 | 50,46 |
| 126E | 12,5 | Rd 52 x 900 | 70 | 90 | 1 | 6,95 | 62,64 |

surcharge:
till Rd 24: 0,50 €/piece
from Rd 30: 0,75 €/piece

***Also available with M thread!***

# BGW-Waved End Fixing inserts DWL + DWK



Design as ***BGW*-Fixing Insert** but with waved ripped steel bar end. By mean of their construction they are especially suitable for slender concrete units and for the installation in thin walls.

Into the yellow galvanized or of stainless steel manufactured socket, a metric round thread is cut in, which should be greased before the installation into the precast concrete unit.

For fastening to a steel formwork, ***BGW*-Magnetic Holders Type HM4** are recommended. To guarantee the correct anchor position after casting process, ***BGW*-Holding Plates, *BGW*-Holding Plates with marking** or ***BGW*-HM4-Magnets** have to be used. To prevent dirt and concrete from penetrating into the thread of the socket, plastic stoppers respectively holding discs are used.

Length of the fixing insert can be changed according to your special installation case. Here you should however consider, that the load may change.

## DWL – Waved End Fixing Insert, long form - galvanized

| art.-no. | load t | type d x h | D mm | e mm | f mm | g = min. c x 2,5 | pack-unit. Stück | weight in kg | price €/piece |
|---|---|---|---|---|---|---|---|---|---|
| 0200 | 0,5 | Rd 12 x 137 | 16 | 22 | 40 | 20 | 250 | 0,08 | 0,77 |
| 0202 | 0,8 | Rd 14 x 170 | 20 | 25 | 48 | 25 | 150 | 0,14 | 0,88 |
| 0204 | 1,2 | Rd 16 x 216 | 21,5 | 27 | 58 | 30 | 100 | 0,19 | 1,18 |
| 0206 | 1,6 | Rd 18 x 235 | 24 | 34 | 65 | 30 | 50 | 0,29 | 1,66 |
| 0208 | 2,0 | Rd 20 x 257 | 27 | 35 | 70 | 35 | 50 | 0,42 | 2,07 |
| 0210 | 2,5 | Rd 24 x 360 | 32 | 43 | 80 | 40 | 25 | 0,70 | 2,48 |
| 0212 | 4,0 | Rd 30 x 450 | 38 | 56 | 101 | 50 | 1 | 1,39 | 4,24 |
| 0214 | 6,3 | Rd 36 x 570 | 48 | 69 | 110 | 62 | 1 | 2,65 | 7,34 |
| 0216 | 8,0 | Rd 42 x 620 | 54 | 80 | 140 | 70 | 1 | 3,75 | 11,40 |
| 0218 | 12,5 | Rd 52 x 880 | 70 | 90 | 170 | 80 | 1 | 6,51 | 28,94 |
| 0273 | 15,0 | Rd 56 x 1200 | 70 | 80 | 170 | 90 | 1 | 13,67 | 55,00 |
| 0218-60 | 20,0 | Rd 60 x 1400 | 76 | 85 | 170 | 100 | 1 | 16,30 | 65,00 |
| 0218-1 | 22,0 | Rd 48 x 1260 | 70 | 60 | 140 | 100 | 1 | 14,08 | 57,00 |

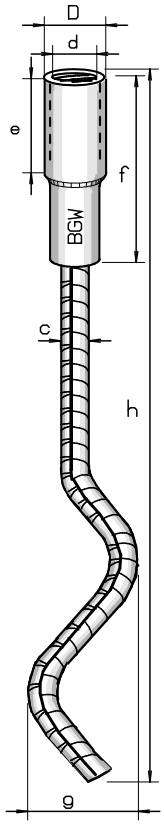


## DWL - Waved End Fixing Insert, long form – stainless steel

| art.-no. | load t | type d x h | D mm | e mm | f mm | g = min. c x 2,5 | pack-unit. Stück | weight in kg | price €/piece |
|---|---|---|---|---|---|---|---|---|---|
| 0238E | 0,5 | Rd 12 x 137 | 16 | 22 | 40 | 20 | 250 | 0,08 | 2,61 |
| 0202E | 0,8 | Rd 14 x 170 | 20 | 25 | 48 | 25 | 150 | 0,14 | 3,20 |
| 0204E | 1,2 | Rd 16 x 216 | 21,5 | 27 | 58 | 30 | 100 | 0,19 | 4,35 |
| 0223E | 1,6 | Rd 18 x 235 | 24 | 34 | 65 | 25 | 50 | 0,29 | 6,75 |
| 0209E | 2,0 | Rd 20 x 257 | 27 | 35 | 70 | 35 | 50 | 0,42 | 8,10 |
| 0210E | 2,5 | Rd 24 x 360 | 32 | 43 | 80 | 40 | 25 | 0,70 | 9,64 |
| 0231E | 4,0 | Rd 30 x 450 | 38 | 56 | 101 | 50 | 1 | 1,39 | 22,55 |
| 0214E | 6,3 | Rd 36 x 570 | 48 | 69 | 110 | 62 | 1 | 2,65 | 32,42 |
| 0216E | 8,0 | Rd 42 x 620 | 54 | 80 | 140 | 70 | 1 | 3,75 | 49,03 |
| 0218E | 12,5 | Rd 52 x 880 | 70 | 90 | 170 | 80 | 1 | 6,51 | 63,25 |

## DWK – Waved End Fixing Insert, short form - galvanized

| art.-no. | load t | type d x h | D mm | e mm | f mm | g = min. c x 2,5 | pack-unit. Stück | weight in kg | price €/piece |
|---|---|---|---|---|---|---|---|---|---|
| 0250 | 0,5 | Rd 12 x 108 | 16 | 22 | 40 | 20 | 250 | 0,07 | 0,74 |
| 0252 | 0,8 | Rd 14 x 130 | 20 | 25 | 48 | 25 | 150 | 0,11 | 0,87 |
| 0254 | 1,2 | Rd 16 x 167 | 21,5 | 27 | 58 | 30 | 100 | 0,16 | 1,07 |
| 0256 | 1,6 | Rd 18 x 175 | 24 | 34 | 65 | 30 | 100 | 0,23 | 1,64 |
| 0258 | 2,0 | Rd 20 x 187 | 27 | 35 | 70 | 35 | 50 | 0,33 | 1,99 |
| 0260 | 2,5 | Rd 24 x 240 | 32 | 43 | 80 | 40 | 25 | 0,52 | 2,35 |
| 0262 | 4,0 | Rd 30 x 300 | 38 | 56 | 101 | 50 | 1 | 0,95 | 3,99 |
| 0264 | 6,3 | Rd 36 x 380 | 48 | 69 | 110 | 62 | 1 | 1,89 | 6,98 |
| 0266 | 8,0 | Rd 42 x 450 | 54 | 80 | 140 | 70 | 1 | 2,80 | 10,89 |

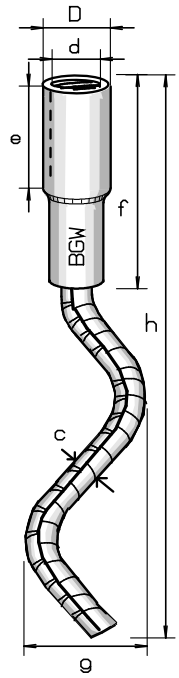


## DWK – Waved End Fixing Insert, short form – stainless steel

| art.-no. | load t | type d x h | D mm | e mm | f mm | g = min. c x 2,5 | pack-unit. Stück | weight in kg | price €/piece |
|---|---|---|---|---|---|---|---|---|---|
| 0250E | 0,5 | Rd 12 x 108 | 16 | 22 | 40 | 20 | 250 | 0,07 | 2,58 |
| 0207E | 0,8 | Rd 14 x 130 | 20 | 25 | 48 | 25 | 150 | 0,11 | 3,20 |
| 0254E | 1,2 | Rd 16 x 167 | 21,5 | 27 | 58 | 30 | 100 | 0,16 | 4,19 |
| 0255E | 1,6 | Rd 18 x 175 | 24 | 34 | 65 | 30 | 100 | 0,23 | 6,75 |
| 0257E | 2,0 | Rd 20 x 187 | 27 | 35 | 70 | 35 | 50 | 0,33 | 8,08 |
| 0260E | 2,5 | Rd 24 x 240 | 32 | 43 | 80 | 40 | 25 | 0,52 | 9,31 |
| 0261E | 4,0 | Rd 30 x 300 | 38 | 56 | 101 | 50 | 1 | 0,95 | 22,01 |
| 0263E | 6,3 | Rd 36 x 380 | 48 | 69 | 110 | 62 | 1 | 1,89 | 31,44 |
| 0266E | 8,0 | Rd 42 x 450 | 54 | 80 | 140 | 70 | 1 | 2,80 | 48,01 |

***Also available with M thread!***

# BGW-Angled Fixing Insert

06/15(06/14)

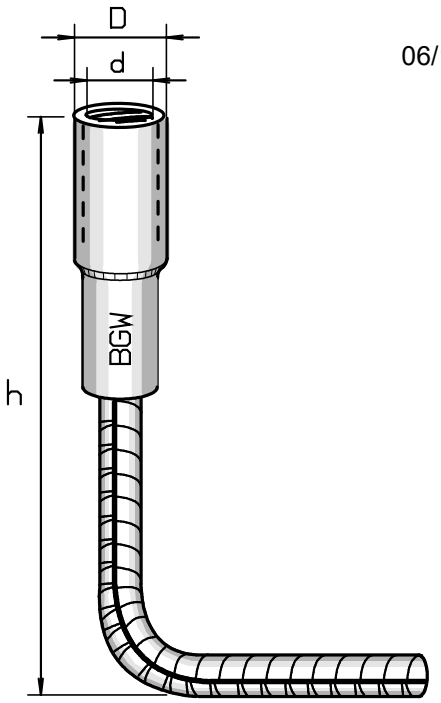


The ***BGW*-Angled Fixing Insert** is, by mean of its low height especially suitable for the installation in flat concrete units.

Into the yellow galvanized or of stainless steel manufactured socket, a metric round thread is cut in, which should be greased before the installation into the precast concrete unit.

For fastening to a steel formwork, ***BGW*-magnetic holders model HM4** are recommended. To guarantee the correct position after casting process, ***BGW*-Holding plates, *BGW*-Holding plates with marking** or ***BGW*-HM4-Magnets** have to be used.

To prevent dirt and concrete from penetrating into the thread of the socket, plastic stoppers respectively holding discs are used.

## Angled Fixing Insert – galvanized

| art.-no. | load t | type d x h | D mm | pack.-unit. piece | weight kg piece | price €/piece |
|---|---|---|---|---|---|---|
| 0302 | 0,5 | Rd 12 x 65 | 16 | 200 | 0,07 | 0,77 |
| 0304 | 0,5 | Rd 12 x 80 | 16 | 200 | 0,08 | 0,79 |
| 0306 | 0,8 | Rd 14 x 70 | 20 | 200 | 0,12 | 0,92 |
| 0308 | 0,8 | Rd 14 x 100 | 20 | 200 | 0,14 | 0,97 |
| 0310 | 1,2 | Rd 16 x 85 | 21,5 | 100 | 0,17 | 1,07 |
| 0312 | 1,2 | Rd 16 x 120 | 21,5 | 100 | 0,21 | 1,12 |
| 0314 | 1,6 | Rd 18 x 105 | 24 | 50 | 0,25 | 1,74 |
| 0316 | 1,6 | Rd 18 x 140 | 24 | 50 | 0,30 | 1,84 |
| 0318 | 2,0 | Rd 20 x 105 | 27 | 50 | 0,34 | 1,94 |
| 0320 | 2,0 | Rd 20 x 150 | 27 | 50 | 0,39 | 2,02 |
| 0323 | 2,5 | Rd 24 x 115 | 32 | 25 | 0,48 | 2,35 |
| 0322 | 2,5 | Rd 24 x 125 | 32 | 25 | 0,49 | 2,35 |
| 0324 | 2,5 | Rd 24 x 150 | 32 | 25 | 0,55 | 2,45 |

## Angled Fixing Insert – stainless steel

| art.-no. | load t | type d x h | D mm | pack.-unit. piece | weight kg piece | price €/piece |
|---|---|---|---|---|---|---|
| 0302E | 0,5 | Rd 12 x 65 | 16 | 200 | 0,07 | 2,61 |
| 0304E | 0,5 | Rd 12 x 80 | 16 | 200 | 0,08 | 2,63 |
| 0306E | 0,8 | Rd 14 x 70 | 20 | 200 | 0,12 | 3,24 |
| 0308E | 0,8 | Rd 14 x 100 | 20 | 200 | 0,14 | 3,29 |
| 0310E | 1,2 | Rd 16 x 85 | 21,5 | 100 | 0,17 | 4,24 |
| 0312E | 1,2 | Rd 16 x 120 | 21,5 | 100 | 0,21 | 4,29 |
| 0314E | 1,6 | Rd 18 x 105 | 24 | 50 | 0,25 | 6,83 |
| 0316E | 1,6 | Rd 18 x 140 | 24 | 50 | 0,30 | 6,93 |
| 0318E | 2,0 | Rd 20 x 105 | 27 | 50 | 0,34 | 7,97 |
| 0320E | 2,0 | Rd 20 x 150 | 27 | 50 | 0,39 | 8,05 |
| 0323E | 2,5 | Rd 24 x 115 | 32 | 25 | 0,48 | 9,51 |
| 0322E | 2,5 | Rd 24 x 125 | 32 | 25 | 0,49 | 9,51 |
| 0324E | 2,5 | Rd 24 x 150 | 32 | 25 | 0,55 | 9,61 |

Also available with metric thread.

# *BGW*-ripped foot anchor



***BGW*-ripped foot anchor**, design das ***BGW*-fixing insert**, but with a forged foot, are by mean of their construction specially suitable for slender concrete units and for the installation in thin walls, like as garages, transformer stations, shaft rings, etc.

The sleeve is galvanized and Rd-threaded. For fixation on steel formwork ***BGW*-holding magnets type HM4** are recommended. In order to ensure the correct seat of the anchor when installed, ***BGW*-holding disks** or ***BGW*-pocket former with marking** must be used. To prevent the penetration of concrete and dirt into the thread, plugs made of plastic or holding disks are used.

A round thread (Rd) has been cut into the galvanized or stainless steel sleeve. Before installing the ripped foot anchor in the precast concrete part, the thread should be visually inspected and greased. Round thread is particularly recommended because it is insensitive to dirt and damage compared to other types of threads.

*The lengths of the anchors can be changed, matching to your specific installation case, but it should be noted that the load level can change.*

**Installation instructions:** *http://bgw-bohr.de/pdf/Einbauanleitung_QLH_DWL_DKW_SARFA.pdf*

## *BGW*-ripped foot anchor – Sleeve galvanized and chromated

| art.-no. | load [t] | thread Rd | thread depth e [mm] | rod Ø c [mm] | height h [mm] | weight [kg] | price €/piece |
|---|---|---|---|---|---|---|---|
| 0400 | 0,5 | 12 | 22 | 8 | 70 | 0,04 | 0,92 |
| 0402 | 0,5 | 12 | 22 | 8 | 100 | 0,05 | 0,96 |
| 0404 | 0,5 | 12 | 22 | 8 | 136 | 0,07 | 1,08 |
| 0406 | 0,5 | 12 | 22 | 8 | 174 | 0,08 | 1,11 |
| 0405 | 0,5 | 12 | 22 | 8 | 250 | 0,11 | 1,21 |
| 0407 | 0,5 | 12 | 22 | 8 | 295 | 0,13 | 1,27 |
| 0408 | 0,8 | 14 | 25 | 10 | 70 | 0,10 | 1,30 |
| 0409 | 0,8 | 14 | 25 | 10 | 105 | 0,12 | 1,27 |
| 0410 | 0,8 | 14 | 25 | 10 | 135 | 0,14 | 1,49 |
| 0413 | 0,8 | 14 | 25 | 10 | 155 | 0,18 | 1,53 |
| 0412 | 0,8 | 14 | 25 | 10 | 167 | 0,18 | 1,57 |
| 0414 | 0,8 | 14 | 25 | 10 | 220 | 0,19 | 1,66 |
| 0416 | 1,2 | 16 | 27 | 10 | 70 | 0,10 | 1,33 |
| 0413-1 | 1,2 | 16 | 27 | 10 | 115 | 0,12 | 1,42 |
| 0419 | 1,2 | 16 | 27 | 10 | 130 | 0,14 | 1,52 |
| 0471 | 1,2 | 16 | 27 | 10 | 140 | 0,14 | 1,55 |
| 0418 | 1,2 | 16 | 27 | 10 | 150 | 0,15 | 1,57 |
| 0420 | 1,2 | 16 | 27 | 10 | 195 | 0,18 | 1,66 |
| 0422 | 1,2 | 16 | 27 | 10 | 260 | 0,22 | 1,82 |
| 0424 | 1,6 | 18 | 34 | 12 | 85 | 0,18 | 1,79 |
| 0423 | 1,6 | 18 | 34 | 12 | 150 | 0,26 | 2,06 |
| 0426 | 1,6 | 18 | 34 | 12 | 170 | 0,28 | 2,12 |
| 0428 | 1,6 | 18 | 34 | 12 | 205 | 0,32 | 2,24 |
| 0430 | 1,6 | 18 | 34 | 12 | 275 | 0,41 | 2,51 |
| 0432 | 2,0 | 20 | 35 | 14 | 90 | 0,22 | 2,10 |
| 0437 | 2,0 | 20 | 35 | 14 | 170 | 0,32 | 2,40 |
| 0439 | 2,0 | 20 | 35 | 14 | 180 | 0,33 | 2,43 |
| 0434 | 2,0 | 20 | 35 | 14 | 190 | 0,34 | 2,48 |
| 0436 | 2,0 | 20 | 35 | 14 | 235 | 0,40 | 2,64 |
| 0438 | 2,0 | 20 | 35 | 14 | 300 | 0,48 | 2,91 |
| 0440 | 2,5 | 24 | 43 | 16 | 105 | 0,32 | 2,43 |
| 0441 | 2,5 | 24 | 43 | 16 | 115 | 0,34 | 2,49 |
| 0442 | 2,5 | 24 | 43 | 16 | 210 | 0,49 | 3,00 |
| 0444 | 2,5 | 24 | 43 | 16 | 260 | 0,56 | 3,27 |
| 0445 | 2,5 | 24 | 43 | 16 | 275 | 0,58 | 3,30 |
| 0446 | 2,5 | 24 | 43 | 16 | 335 | 0,68 | 3,70 |
| 0447 | 2,5 | 24 | 43 | 16 | 380 | 0,75 | 3,94 |
| 0448 | 4,0 | 30 | 56 | 20 | 125 | 0,55 | 4,29 |
| 0449 | 4,0 | 30 | 56 | 20 | 150 | 0,60 | 4,40 |
| 0450 | 4,0 | 30 | 56 | 20 | 270 | 0,91 | 4,82 |
| 0452 | 4,0 | 30 | 56 | 20 | 390 | 1,21 | 5,76 |
| 0454 | 4,0 | 30 | 56 | 20 | 510 | 1,50 | 6,66 |
| 0455 | 6,3 | 36 | 69 | 25 | 230 | 1,24 | 8,60 |
| 0456 | 6,3 | 36 | 69 | 25 | 330 | 1,84 | 9,93 |
| 0457 | 6,3 | 36 | 69 | 25 | 440 | 2,30 | 11,01 |
| 0458 | 6,3 | 36 | 69 | 25 | 490 | 2,46 | 11,87 |
| 0460 | 6,3 | 36 | 69 | 25 | 640 | 3,03 | 13,74 |
| 0462 | 8,0 | 42 | 80 | 28 | 450 | 3,11 | 15,85 |
| 0464 | 8,0 | 42 | 80 | 28 | 590 | 3,79 | 16,87 |

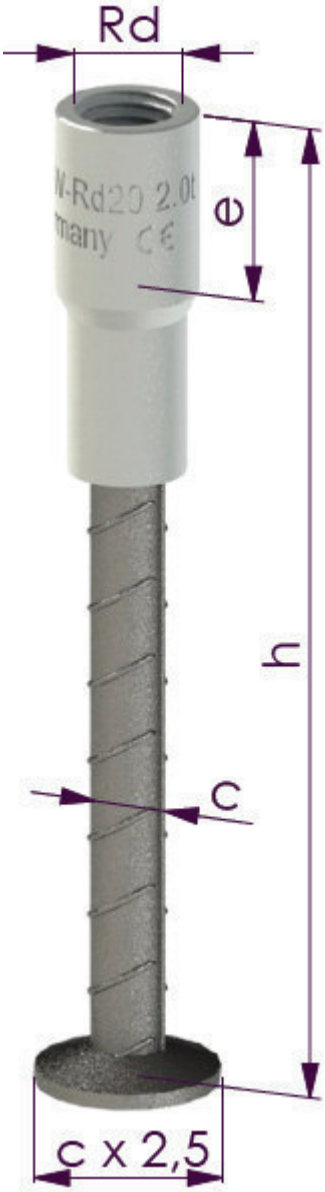

## *BGW*-ripped foot anchor – Sleeve with stainless steel

06/15(06/14)

| art.-no. | load [t] | thread Rd | thread depth e [mm] | rod Ø c [mm] | height h [mm] | weight [kg] | price €/piece |
|---|---|---|---|---|---|---|---|
| 0400E | 0,5 | 12 | 22 | 8 | 70 | 0,04 | 2,58 |
| 0402E | 0,5 | 12 | 22 | 8 | 100 | 0,05 | 2,61 |
| 0404E | 0,5 | 12 | 22 | 8 | 136 | 0,07 | 2,62 |
| 0406E | 0,5 | 12 | 22 | 8 | 174 | 0,08 | 2,65 |
| 0405E | 0,5 | 12 | 22 | 8 | 250 | 0,11 | 2,71 |
| 0407E | 0,5 | 12 | 22 | 8 | 295 | 0,13 | 2,74 |
| 0408E | 0,8 | 14 | 25 | 10 | 70 | 0,10 | 3,24 |
| 0409E | 0,8 | 14 | 25 | 10 | 105 | 0,12 | 3,25 |
| 0410E | 0,8 | 14 | 25 | 10 | 135 | 0,14 | 3,27 |
| 0412E | 0,8 | 14 | 25 | 10 | 167 | 0,18 | 3,30 |
| 0414E | 0,8 | 14 | 25 | 10 | 220 | 0,19 | 3,34 |
| 0416E | 1,2 | 16 | 27 | 10 | 70 | 0,10 | 4,27 |
| 0413E | 1,2 | 16 | 27 | 10 | 115 | 0,12 | 4,29 |
| 0419E | 1,2 | 16 | 27 | 10 | 130 | 0,14 | 4,30 |
| 0471E | 1,2 | 16 | 27 | 10 | 140 | 0,14 | 4,31 |
| 0418E | 1,2 | 16 | 27 | 10 | 150 | 0,15 | 4,32 |
| 0420E | 1,2 | 16 | 27 | 10 | 195 | 0,18 | 4,35 |
| 0422E | 1,2 | 16 | 27 | 10 | 260 | 0,22 | 4,45 |
| 0424E | 1,6 | 18 | 34 | 12 | 85 | 0,18 | 6,42 |
| 0423E | 1,6 | 18 | 34 | 12 | 150 | 0,26 | 6,51 |
| 0426E | 1,6 | 18 | 34 | 12 | 170 | 0,28 | 6,55 |
| 0428E | 1,6 | 18 | 34 | 12 | 205 | 0,32 | 6,57 |
| 0430E | 1,6 | 18 | 34 | 12 | 275 | 0,41 | 6,73 |
| 0432E | 2,0 | 20 | 35 | 14 | 90 | 0,22 | 7,67 |
| 0437E | 2,0 | 20 | 35 | 14 | 170 | 0,32 | 7,85 |
| 0439E | 2,0 | 20 | 35 | 14 | 180 | 0,33 | 7,88 |
| 0434E | 2,0 | 20 | 35 | 14 | 190 | 0,34 | 7,90 |
| 0436E | 2,0 | 20 | 35 | 14 | 235 | 0,40 | 7,97 |
| 0438E | 2,0 | 20 | 35 | 14 | 300 | 0,48 | 8,25 |
| 0440E | 2,5 | 24 | 43 | 16 | 105 | 0,32 | 9,46 |
| 0441E | 2,5 | 24 | 43 | 16 | 115 | 0,34 | 9,48 |
| 0442E | 2,5 | 24 | 43 | 16 | 210 | 0,49 | 9,61 |
| 0444E | 2,5 | 24 | 43 | 16 | 260 | 0,56 | 9,72 |
| 0445E | 2,5 | 24 | 43 | 16 | 275 | 0,58 | 9,80 |
| 0446E | 2,5 | 24 | 43 | 16 | 335 | 0,68 | 10,13 |
| 0447E | 2,5 | 24 | 43 | 16 | 380 | 0,75 | 10,24 |
| 0448E | 4,0 | 30 | 56 | 20 | 125 | 0,55 | 22,60 |
| 0449E | 4,0 | 30 | 56 | 20 | 150 | 0,60 | 22,71 |
| 0450E | 4,0 | 30 | 56 | 20 | 270 | 0,91 | 22,86 |
| 0452E | 4,0 | 30 | 56 | 20 | 390 | 1,21 | 23,01 |
| 0454E | 4,0 | 30 | 56 | 20 | 510 | 1,50 | 23,17 |
| 0455E | 6,3 | 36 | 69 | 25 | 230 | 1,24 | 32,96 |
| 0456E | 6,3 | 36 | 69 | 25 | 330 | 1,84 | 33,47 |
| 0457E | 6,3 | 36 | 69 | 25 | 440 | 2,30 | 34,07 |
| 0458E | 6,3 | 36 | 69 | 25 | 490 | 2,46 | 34,28 |
| 0460E | 6,3 | 36 | 69 | 25 | 640 | 3,03 | 35,00 |
| 0462E | 8,0 | 42 | 80 | 28 | 450 | 3,11 | 53,48 |
| 0464E | 8,0 | 42 | 80 | 28 | 590 | 3,79 | 54,50 |
| 0466E | 8,0 | 42 | 80 | 28 | 770 | 4,67 | 57,06 |
| 0468E | 12,5 | 52 | 97 | 32 | 730 | 4,91 | 60,13 |
| 0470E | 12,5 | 52 | 97 | 32 | 960 | 6,03 | 67,03 |

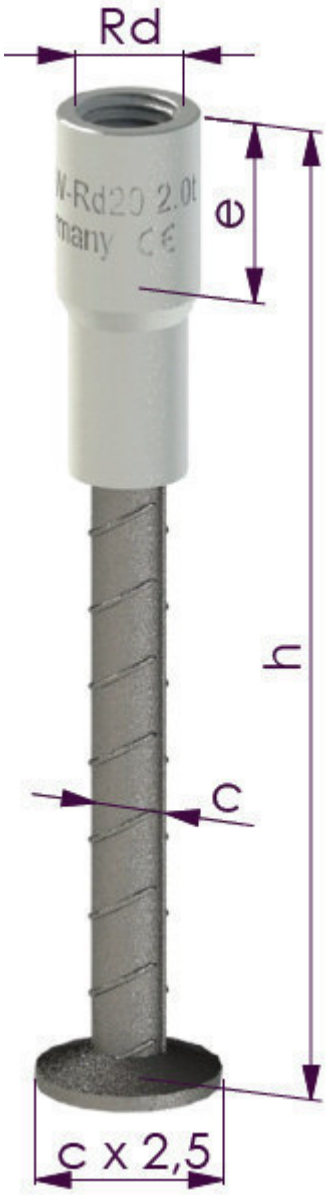


***Also available with M thread!***

# *BGW*-Segment anchor / *BGW*-Ripped foot anchor fully occupied

06/12(11/18)

***BGW*-segment anchor** or ***BGW*-ripped foot anchor fully occupied** is due to its design especially for slim precast concrete elements and for installation in thin walls, such as in garages, transformer stations, manholes. Execution like *BGW*-ribbed foot anchor, but with a thicker rebar and a thicker sleeve. This allows the segment anchor to absorb twice the load at almost the same dimensions as the ribbed anchor.
*BGW*-segment anchor belongs to a transport system and consists of:

- BGW-Segment anchor / BGW-Ripped foot anchor fully occupied
- BGW-Segment anchor lifter
- BGW-Holding plate with holding magnet type HM4-D
- BGW- sealing plug

For fixation on steel formwork BGW-Magnets Type HM4-D are recommended. BGW-segment anchor lifter supports itself by its geometry on the flanks of the recess. This relieves the tension on the threaded pin and allows greater transport safety.
**Attention: only one lifting device with appropriate load suspension may be used!**

## *BGW*-Segment anchor– Sleeve galvanized and chromated

| art.-no. | load t | thread Rd | thread depth e (mm) | height h (mm) | Ø BST d (mm) | Ø sleeve e (mm) | packaging unit piece | weight kg | price €/piece |
|---|---|---|---|---|---|---|---|---|---|
| 0400-1 | 1,3 | Rd 12 x 1,75 | 18 | 70 | 10 | 18 | 200 | 0,086 | 1,8 |
| 0404-1 | 1,3 | Rd 12 x 1,75 | 18 | 130 | 10 | 18 | 150 | 0,124 | 2 |
| 0422-3 | 2,5 | Rd 16 x 2 | 24 | 115 | 14 | 24 | 50 | 0,245 | 2,3 |
| 0422-2 | 2,5 | Rd 16 x 2 | 24 | 140 | 14 | 24 | 50 | 0,283 | 2,48 |
| 0422-1 | 2,5 | Rd 16 x 2 | 24 | 190 | 14 | 24 | 50 | 0,33 | 2,75 |
| 0436-2 | 4 | Rd 20 x 2,5 | 30 | 125 | 16 | 27 | 50 | 0,329 | 5,2 |
| 0436-1 | 4 | Rd 20 x 2,5 | 30 | 255 | 16 | 27 | 25 | 0,664 | 5,6 |
| 0446-2 | 5 | Rd 24 x 3 | 36 | 140 | 20 | 35 | 25 | 0,664 | 6,3 |
| 0446-1 | 5 | Rd 24 x 3 | 36 | 325 | 20 | 35 | 1 | 1,153 | 6,9 |
| 0446-3 | 7,5 | Rd 30 x 3,5 | 45 | 185 | 25 | 42,4 | 1 | 1,184 | 11 |
| 0452-1 | 7,5 | Rd 30 x 3,5 | 45 | 400 | 25 | 42,4 | 1 | 2,108 | 12,7 |
| 0458-1 | 10 | Rd 36 x 4 | 54 | 475 | 28 | 48 | 1 | 3,05 | 24,1 |
| 0464-1 | 12,5 | Rd 42 x 4,5 | 63 | 550 | 32 | 54 | 1 | 4,3 | 41,35 |
| 0467-1 | 15 | Rd 52 x 5 | 78 | 575 | 34 | 70 | 1 | 6,22 | 45,4 |

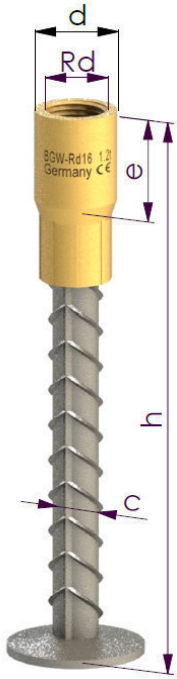


# *BGW*-Thread/-segment-bar anchors uprated

## *BGW*-thread/-segment-bar anchor – Sleeve galvanized and chromated

| art.-no. | load t | thread Rd | thread depth e (mm) | height h (mm) | Ø BST d (mm) | Ø sleeve e (mm) | packaging unit piece | weight kg | price €/piece |
|---|---|---|---|---|---|---|---|---|---|
| 0100-1 | 1,3 | Rd 12 x 1,75 | 18 | 300 | 10 | 19 | 50 | 0,227 | 2 |
| 0100-5 | 2,5 | Rd 16 x 2 | 14 | 400 | 14 | 24 | 25 | 0,558 | 3,9 |
| 0100-10 | 4 | Rd 20 x 2,5 | 30 | 480 | 16 | 27 | 1 | 0,877 | 5,9 |
| 0100-15 | 5 | Rd 24 x 3 | 36 | 540 | 20 | 35 | 1 | 1,584 | 7,95 |
| 0100-20 | 7,5 | Rd 30 x 3,5 | 45 | 700 | 25 | 42,4 | 1 | 3,047 | 13,85 |
| 0100-25 | 10 | Rd 36 x 4 | 54 | 800 | 28 | 48 | 1 | 4,403 | 25,65 |
| 0100-30 | 12,5 | Rd 42 x 4,5 | 63 | 920 | 32 | 54 | 1 | 6,572 | 39,35 |
| 0100-35 | 15 | Rd 52 x 5 | 78 | 1100 | 34 | 70 | 1 | 9,871 | 49,5 |

# Matching to the fully occupied segment anchor 06/12(11/18) the correspronding *BGW*-Segment anchor lifter

The threaded part of the BGW-Segment anchor lifter is made of quality steel. The wire rope, pressed in a 8-way form, is galvanized. The welded pressure plate is matched precisely to the recess body. The lifter is

marked with a steel ring.

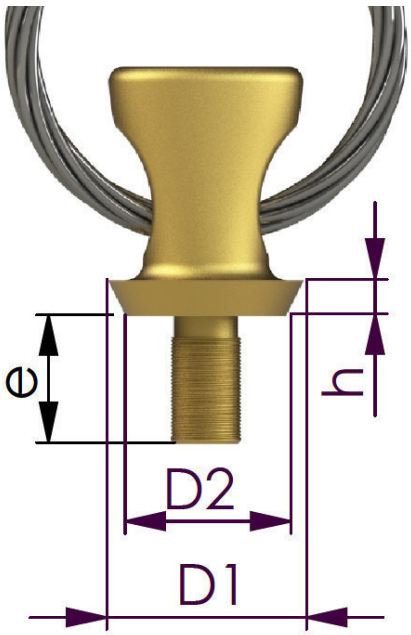


### *BGW*-Segment anchor lifter

| art.-no. | thread | load t | rope Ø mm | load limit / t bei 90° | thread length /mm | ØD1 mm | ØD2 mm | h mm | overall-length l mm | price €/piece . |
|---|---|---|---|---|---|---|---|---|---|---|
| D-0650G8 | Rd 12 | 1,3 | 8 | 0,65 | 20 | 40 | 30 | 10 | 335 | 88,00 |
| D-0654G8 | Rd 16 | 2,5 | 12 | 1,25 | 20 | 40 | 30 | 10 | 385 | 98,00 |
| D-0658G8 | Rd 20 | 4,0 | 16 | 2,00 | 26 | 55 | 45 | 10 | 470 | 140,00 |
| D-0660G8 | Rd 24 | 5,0 | 16 | 2,50 | 30 | 55 | 45 | 10 | 550 | 150,00 |
| D-0662G8 | Rd 30 | 7,5 | 20 | 3,75 | 36 | 70 | 60 | 10 | 590 | 245,00 |
| D-0664G8 | Rd 36 | 10,0 | 22 | 5,00 | 50 | 70 | 60 | 10 | 780 | 308,00 |
| D-0666G8 | Rd 42 | 12,5 | 26 | 6,25 | 60 | 95 | 85 | 10 | 860 | 322,00 |
| D-0668G8 | Rd 52 | 15,0 | 26 | 7,50 | 60 | 95 | 85 | 10 | 1080 | 345,00 |

# *BGW*-Stop invertebrates with swivel, thimle and rope for segment anchors

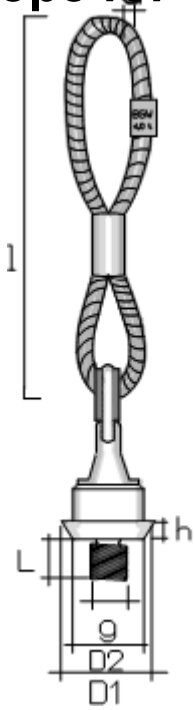


Fit to associated magnet or steel pocket former, which prop up onto the concrete.
The lifter is marked with a steel ring

| art.-no. | thread M or Rd | Load limit t | | g x l mm | rope-Ø d mm | ØD1 mm | ØD2 mm | h mm | overall-length l mm | price €/piece |
|---|---|---|---|---|---|---|---|---|---|---|
| | | 90° | 0° | | | | | | | |
| D-0602G8 | 12 | 0,50 | 1,00 | 12x18 | 8 | 36 | 30 | 10 | 335 | 140,00 |
| D-0606G8 | 16 | 1,25 | 2,50 | 16x20 | 12 | 36 | 30 | 10 | 385 | 140,00 |
| D-0610G8 | 20 | 2,00 | 4,00 | 20x30 | 16 | 49,5 | 45 | 10 | 470 | 200,00 |
| D-0612G8 | 24 | 3,15 | 6,30 | 24x34 | 16 | 57 | 45 | 10 | 550 | 215,00 |
| D-0614G8 | 30 | 5,30 | 10,60 | 30x44 | 16 | 66 | 60 | 10 | 590 | 350,00 |
| D-0616G8 | 36 | 8,00 | 11,80 | 36x53 | 22 | 80 | 60 | 10 | 780 | 440,00 |
| D-0618G8 | 42 | 10,00 | 15,00 | 42x53 | 26 | 80 | 85 | 10 | 860 | 460,00 |
| D-0620G8 | 52 | 10,00 | 15,00 | 52x78 | 28 | 80 | 85 | 10 | 1080 | 510,00 |

# System Accessories for the *BGW*-Segment anchor lifter: *BGW*-magnetic holder type HM4-D

06/12(06/12)

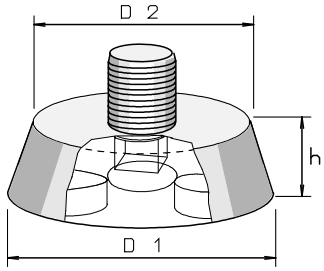


### *BGW*-magnetic holder type HM4-D suitable for DEHA-Perfect head

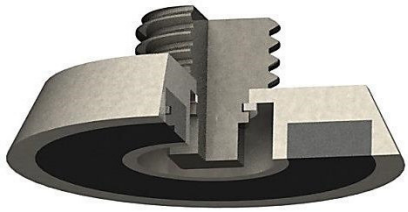

**with interchangeable threaded stud (and retaining rind/Seegerring):**

| art.-no. | M or Rd thread | adhesion kp | D1 mm | D2 mm | height h mm | price €/piece |
|---|---|---|---|---|---|---|
| HM4-D-30/10M12 | 12 | 50 | 40 | 30 | 10 | 40,90 |
| HM4-D-30/10M16 | 16 | 50 | 40 | 30 | 10 | 40,90 |
| HM4-D-45/10M20 | 20 | 100 | 55 | 45 | 10 | 51,13 |
| HM4-D-45/10M24 | 24 | 100 | 55 | 45 | 10 | 51,13 |

**with hexagon socket and welded threaded pin:**
(for this purpose an Allen key Ø10 mm is used)

| art.-no. | M or Rd threat | adhesion kp | D1 mm | D2 mm | height h mm | price €/piece |
|---|---|---|---|---|---|---|
| HM4-D-30/10M12-1 | 12 | 50 | 40 | 30 | 10 | 40,90 |
| HM4-D-30/10M16-1 | 16 | 50 | 40 | 30 | 10 | 40,90 |
| HM4-D-45/10M20-1 | 20 | 100 | 55 | 45 | 10 | 51,13 |
| HM4-D-45/10M24-1 | 24 | 100 | 55 | 45 | 10 | 51,13 |
| HM4-D-60/10M30-1 | 30 | 120 | 70 | 60 | 10 | 85,18 |
| HM4-D-60/10M36 | 36 | 120 | 70 | 60 | 10 | 85,18 |
| HM4-D-85/10M42 | 42 | 120 | 95 | 85 | 10 | 125,00 |
| HM4-D-85/10M52 | 52 | 120 | 95 | 85 | 10 | 125,00 |

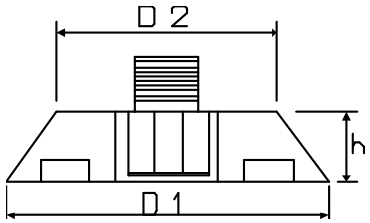


## *BGW*- holding plate made of steel without magnet

**with interchangeable threaded stud (and retaining rind/Seegerring):**

| art.-no. | M or Rd thread | D1 mm | D2 mm | height h mm | price €/piece |
|---|---|---|---|---|---|
| HM4-DS-30/10M12 | 12 | 40 | 30 | 10 | 16,00 |
| HM4-DS-30/10M16 | 16 | 40 | 30 | 10 | 19,00 |
| HM4-DS-45/10M20 | 20 | 55 | 45 | 10 | 28,00 |
| HM4-DS-45/10M24 | 24 | 55 | 45 | 10 | 30,00 |
| HM4-DS-60/10M30 | 30 | 70 | 60 | 10 | 35,00 |

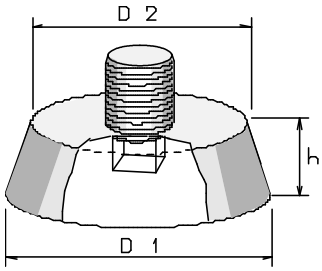


**with hexagon socket and welded threaded pin:**

| art.-no. | M or Rd thread | D1 mm | D2 mm | height h mm | price €/piece |
|---|---|---|---|---|---|
| HM4-DS-30/10M12-1 | 12 | 40 | 30 | 10 | 16,00 |
| HM4-DS-30/10M16-1 | 16 | 40 | 30 | 10 | 19,00 |
| HM4-DS-45/10M20-1 | 20 | 55 | 45 | 10 | 28,00 |
| HM4-DS-45/10M24-1 | 24 | 55 | 45 | 10 | 30,00 |
| HM4-DS-60/10M30-1 | 30 | 70 | 60 | 10 | 35,00 |
| HM4-DS-60/10M36 | 36 | 70 | 60 | 10 | 45,00 |
| HM4-DS-85/10M42 | 42 | 95 | 85 | 10 | 48,00 |
| HM4-DS-85/10M52 | 52 | 95 | 85 | 10 | 51,00 |

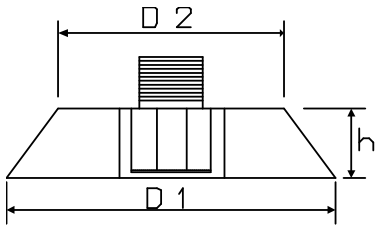

# *BGW*-bar with metric thread



| type d x h | length mm | packaging. unit/piece | weight kg/meter | price €/meter |
|---|---|---|---|---|
| M/Rd 12 x 25 | 100 | 500 | 0,088 | on demand |
| M/Rd 12 x 25 | 150 | 500 | 0,133 | |
| M/Rd 16 x 30 | 100 | 250 | 0,198 | |
| M/Rd 16 x 30 | 150 | 250 | 0,235 | |
| M/Rd 16 x 30 | 190 | 250 | 0,300 | |
| M/Rd 16 x 30 | 260 | 250 | 0,410 | |
| M/Rd 16 x 50 | 300 | 250 | 0,470 | |
| M/Rd 18 x 80 | 165 | 250 | 0,330 | |
| M/Rd 20 x 40 | 100 | 250 | 0,247 | |
| M/Rd 20 x 40 | 150 | 250 | 0,371 | |
| M/Rd 20 x 40 | 130 | 250 | 0,321 | |
| M/Rd 20 x 40 | 210 | 250 | 0,421 | |
| M/Rd 20 x 50 | 200 | 250 | 0,494 | |
| M/Rd 20 x 50 | 250 | 250 | 0,620 | |
| M/Rd 20 x 50 | 330 | 250 | 0,810 | |
| M/Rd 24 x 40 | 230 | 250 | 0,810 | |
| M/Rd 24 x 50 | 250 | 250 | 1,000 | |
| M/Rd 24 x 80 | 165 | 250 | 0,635 | |
| M/Rd 30 x 60 | 350 | 100 | 1,942 | |
| M/Rd 30 x 40 | 210 | 100 | 1,170 | |
| M/Rd 30 x 60 | 235 | 100 | 1,300 | |
| M/Rd 30 x 60 | 300 | 100 | 1,300 | |
| M/Rd 30 x 70 | 150 | 100 | 0,832 | |
| M/Rd 30 x 80 | 165 | 100 | 0,407 | |
| M/Rd 36 x 65 | 150 | 100 | 1,250 | |
| M/Rd 36 x 65 | 165 | 100 | 1,310 | |
| M/Rd 36 x 65 | 200 | 100 | 1,980 | |
| M/Rd 36 x 65 | 250 | 100 | 1,997 | |
| M/Rd 42 x 80 | 250 | 100 | 2,720 | |
| M/Rd 52 x 80 | 200 | 50 | 3,334 | |

***BGW***-bars with metric thread are available in following material:

- St52 oder St37
- galvanized or blank
- strainless steel V4A or V2A
- metric thread
- round thread

**variant length oft he thorn or of the thread or special thread on demand!**

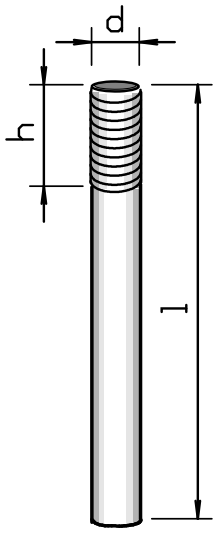


# *BGW*-thread stud or –threaded pin

| metric thread | round-thread | length complete/m | Packaging unit/piece | weight kg/m | price €/meter |
|---|---|---|---|---|---|
| M6 | Rd 6 | 1<br>2 | 100 | 0,222<br>0,444 | on demand |
| M8 | Rd 8 | 1<br>2 | 100 | 0,319<br>0,638 | |
| M10 | Rd 10 | 1<br>2 | 50 | 0,500<br>1,000 | |
| M12 | Rd 12 | 1<br>2 | 50 | 0,725<br>1,450 | |
| M14 | Rd 14 | 1<br>2 | 50 | 1,208<br>2,416 | |
| M16 | Rd 16 | 1<br>2 | 50 | 1,330<br>2,660 | |
| M18 | Rd 18 | 1<br>2 | 50 | 1,990<br>3,980 | |
| M20 | Rd 20 | 1<br>2 | 25 | 2,080<br>4,160 | |
| M24 | Rd 24 | 1<br>2 | 25 | 3,000<br>6,000 | |
| M30 | Rd 30 | 1<br>2 | 25 | 5,549<br>11,098 | |
| M36 | Rd 36 | 1<br>2 | 10 | 7,986<br>15,972 | |
| M42 | Rd 42 | 1<br>2 | 10 | 10,880<br>21,760 | |
| M52 | Rd 52 | 1<br>2 | 10 | 16,620<br>33,240 | |

**Length vatiation on demand. Available up to 6 meter, resp. meter pieces!**

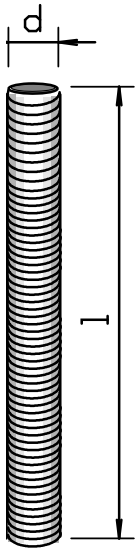

# *BGW-flat steel anchor*

06/18(06/18)

By mean of their low height, the BGW-flat steel anchor are useable in all areas oft he precast concrete construction. They are especially suitable for fastening pillars and props at the assembly of precast concrete units, for the installation in flat parts, like plates and tubes, and for mechanical use.

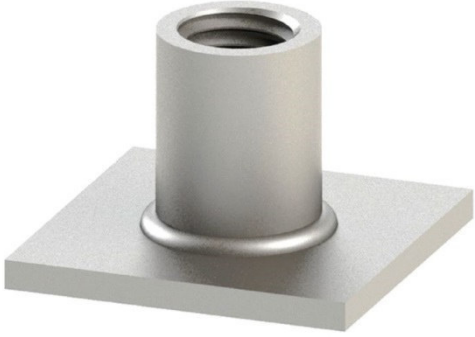

In the galvanized and chromated (gold) or made of stainless steel sleeve, a Rd thread is cut, which should be greased before installation in the precast concrete part. For fixation to steel formwork, ***BGW*-magnetic holders type HM4** are recommended. In order to ensure the correct position of the anchor when installed, ***BGW*-holding plate** or ***BGW*-pocket former with marking** must be used. To prevent the penetration of dirt and concrete into the thread of the sleeve prevent plastic stopper and stopper discs are used

*The anchor lengths can be changed to your specific installation case upon request.*

## Flat steel anchor – galvanized and chromated – Version: with hole in plate

| art.-no. | load t | type d x h | flat steel mm | e mm | D mm | packaging unit/piece | weight Kg/ 100 piece. | price € piece |
|---|---|---|---|---|---|---|---|---|
| 0350 | 0,5 | Rd 12 x 30 | 35 x 35 x 3 | 22 | 16 | 100 | 4,0 | 1,94 |
| 0352 | 0,8 | Rd 14 x 33 | 35 x 35 x 3 | 25 | 18 | 100 | 7,0 | 1,99 |
| 0354 | 1,2 | Rd 16 x 35 | 50 x 35 x 3 | 27 | 21 | 100 | 9,0 | 2,20 |
| 0354/55 | 1,2 | Rd 16 x 55 | 80 x 60 x 5 | 27 | 21 | 100 | 27,0 | 2,60 |
| 0356 | 1,6 | Rd 18 x 44 | 60 x 45 x 5 | 34 | 25 | 50 | 19,0 | 2,66 |
| 0358 | 2,0 | Rd 20 x 47 | 60 x 60 x 5 | 35 | 27 | 50 | 25,0 | 3,17 |
| 03601 | 2,5 | Rd 24 x 54 | 60 x 60 x 5 | 43 | 32 | 50 | 29,0 | 3,30 |
| 0360 | 2,5 | Rd 24 x 54 | 80 x 60 x 5 | 43 | 32 | 50 | 35,0 | 3,32 |
| 0360-70 | 2,5 | Rd 24 x 70 | 190 x 70 x 5 | 43 | 32 | 50 | 74,0 | 4,10 |
| 0362 | 4,0 | Rd 30 x 72 | 100 x 80 x 6 | 56 | 38 | 25 | 70,0 | 5,32 |
| 0364 | 6,3 | Rd 36 x 80 | 130 x 100 x 6 | 69 | 48 | 10 | 118,0 | 8,39 |
| 0366 | 8,0 | Rd 42 x 98 | 130 x 130 x 8 | 80 | 54 | 10 | 188,0 | 12,83 |
| 0368 | 12,5 | Rd 52 x 120 | 150 x 130 x 8 | 97 | 70 | 10 | 245,0 | 23,78 |

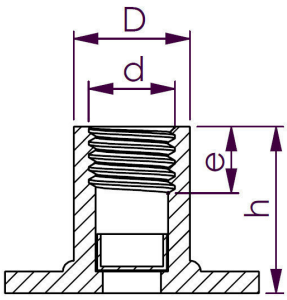


## Flat steel anchor – galvanized and chromated – Version: without hole in plate

| art.-no. | load t | type d x h | flat steel mm | e mm | D mm | packaging unit/piece | weight Kg/ 100 piece. | price € piece |
|---|---|---|---|---|---|---|---|---|
| 03501 | 0,5 | Rd 12 x 30 | 35 x 35 x 3 | 22 | 16 | 100 | 4,0 | 1,08 |
| 03521 | 0,8 | Rd 14 x 33 | 35 x 35 x 3 | 25 | 18 | 100 | 7,0 | 1,14 |
| 0354-2 | 1,2 | Rd 16 x 35 | 50 x 35 x 3 | 27 | 21 | 100 | 9,0 | 1,24 |
| 0354/55-1 | 1,2 | Rd 16 x 55 | 80 x 60 x 5 | 27 | 21 | 100 | 27,0 | 1,86 |
| 03561 | 1,6 | Rd 18 x 44 | 60 x 45 x 5 | 34 | 25 | 50 | 19,0 | 1,74 |
| 03581 | 2,0 | Rd 20 x 47 | 60 x 60 x 5 | 35 | 27 | 50 | 25,0 | 2,20 |
| 03601-2 | 2,5 | Rd 24 x 54 | 60 x 60 x 5 | 43 | 32 | 50 | 29,0 | 2,44 |
| 03602 | 2,5 | Rd 24 x 54 | 80 x 60 x 5 | 43 | 32 | 50 | 35,0 | 2,70 |
| 0360-70-1 | 2,5 | Rd 24 x 70 | 190 x 70 x 5 | 43 | 32 | 50 | 74,0 | 5,20 |
| 03621 | 4,0 | Rd 30 x 72 | 100 x 80 x 6 | 56 | 38 | 25 | 70,0 | 5,44 |
| 03641 | 6,3 | Rd 36 x 80 | 130 x 100 x 6 | 69 | 48 | 10 | 118,0 | 7,14 |
| 03661 | 8,0 | Rd 42 x 98 | 130 x 130 x 8 | 80 | 54 | 10 | 188,0 | 14,20 |
| 03681 | 12,5 | Rd 52 x 120 | 150 x 130 x 8 | 97 | 70 | 10 | 245,0 | 20,24 |

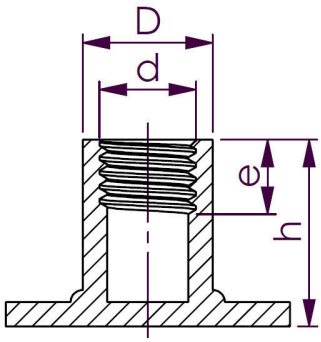


## Flat steel anchor – stainless steel

***sleeve and plate made of stainless steel V2A AISI 304***

| art.-no. | load t | type d x h | flat steel mm | e mm | D mm | packaging unit/piece | weight Kg/ 100 piece. | price € piece |
|---|---|---|---|---|---|---|---|---|
| 0350E | 0,5 | Rd 12 x 30 | 35 x 35 x 3 | 22 | 16 | 100 | 4,0 | 4,25 |
| 0352E | 0,8 | Rd 14 x 33 | 35 x 35 x 3 | 25 | 18 | 100 | 7,0 | 4,95 |
| 0354E | 1,2 | Rd 16 x 35 | 50 x 35 x 3 | 27 | 21 | 100 | 9,0 | 5,80 |
| 0354/55E | 1,2 | Rd 16 x 55 | 80 x 60 x 5 | 27 | 21 | 100 | 27,0 | 5,80 |
| 0356E | 1,6 | Rd 18 x 44 | 60 x 45 x 5 | 34 | 25 | 50 | 19,0 | 11,05 |
| 0358E | 2,0 | Rd 20 x 47 | 60 x 60 x 5 | 35 | 27 | 50 | 25,0 | 11,85 |
| 03601E | 2,5 | Rd 24 x 54 | 60 x 60 x 5 | 43 | 32 | 50 | 29,0 | 12,90 |
| 0360E | 2,5 | Rd 24 x 54 | 80 x 60 x 5 | 43 | 32 | 50 | 35,0 | 13,05 |
| 0362E | 4,0 | Rd 30 x 72 | 100 x 80 x 6 | 56 | 38 | 25 | 70,0 | 20,90 |
| 0364E | 6,3 | Rd 36 x 80 | 130 x 100 x 6 | 69 | 48 | 10 | 118,0 | 28,95 |
| 0366E | 8,0 | Rd 42 x 98 | 130 x 130 x 8 | 80 | 54 | 10 | 188,0 | 70,00 |
| 0368E | 12,5 | Rd 52 x 120 | 150 x 130 x 8 | 97 | 70 | 10 | 245,0 | 113,00 |

# BGW-Crutch- and Screw anchor



BGW-Crutch- and Screw anchor suitable by their design for slender precast concrete elements and for installation in thin walls, such as garages, transformer stations, manhole rings, etc. In the galvanized or made of stainless steel sleeve, a round thread (Rd) is cut should be greased before installation in the precast concrete part. For fixation on steel formwork BGW holding magnets type HM4 are recommended. In order to prevent the ingress of dirt and concrete into the thread of the sleeve, sealing plugs made of plastic or retaining washers are used. The end faces of the tie rods are painted to match the associated lifting cable loops colored. The anchor lengths and bar diameters can be changed to suit your particular installation site, but it should be noted that the load level can change.

## Crutch Anchor – galvanized socket

| art.-no. | load t | type<br>d x h | pack. unit<br>piece | weight<br>kg/piece | price<br>€/piece |
|---|---|---|---|---|---|
| 05900 | 0,5 | Rd 12 x 180 | 100 | 0,095 | 1,79 |
| 05902 | 0,8 | Rd 14 x 250 | 100 | 0,240 | 2,16 |
| 05904 | 1,2 | Rd 16 x 310 | 100 | 0,368 | 2,59 |
| 05906 | 1,6 | Rd 18 x 350 | 50 | 0,480 | 3,50 |
| 05908 | 2,0 | Rd 20 x 380 | 50 | 0,682 | 4,30 |
| 05910 | 2,5 | Rd 24 x 490 | 25 | 1,123 | 5,25 |
| 05912 | 4,0 | Rd 30 x 630 | 1 | 2,236 | 9,40 |
| 05914 | 6,3 | Rd 36 x 790 | 1 | 4,273 | 15,65 |
| 05916 | 8,0 | Rd 42 x 860 | 1 | 6,107 | 27,20 |

Prices for stainless steel on request!

## Screw anchor – galvanized socket

**Installation Instructions:** http://bgw-bohr.de/pdf/Einbauanleitung_QLH_DWL_DKW_SARFA.pdf

| art.-no. | load t | type<br>d x h | pack. unit<br>piece | weight<br>kg/piece | price<br>€/piece |
|---|---|---|---|---|---|
| 0380-55 | 0,5 | Rd 12 x 55 | 200 | 0,050 | 0,83 |
| 0387 | 0,5 | Rd 12 x 60 | 200 | 0,052 | 0,89 |
| 0380 | 0,5 | Rd 12 x 70 | 200 | 0,056 | 1,03 |
| 0381 | 0,8 | Rd 14 x 70 | 100 | 0,079 | 1,10 |
| 0382-70 | 1,2 | Rd 16 x 70 | 100 | 0,106 | 1,15 |
| 0382 | 1,2 | Rd 16 x 80 | 100 | 0,124 | 1,21 |
| 0382-105 | 1,2 | Rd 16 x 105 | 100 | 0,145 | 1,44 |
| 0382-118 | 1,2 | Rd 16 x 118 | 100 | 0,154 | 1,57 |
| 0383-90 | 1,6 | Rd 18 x 90 | 50 | 0,194 | 1,64 |
| 0383 | 1,6 | Rd 18 x 100 | 50 | 0,206 | 1,71 |
| 0384-80 | 2,0 | Rd 20 x 80 | 50 | 0,221 | 1,89 |
| 0384-90 | 2,0 | Rd 20 x 90 | 50 | 0,231 | 2,03 |
| 0384-100 | 2,0 | Rd 20 x 100 | 50 | 0,241 | 2,10 |
| 0384-107 | 2,0 | Rd 20 x 107 | 50 | 0,252 | 2,14 |
| 0384 | 2,0 | Rd 20 x 127 | 50 | 0,275 | 2,16 |
| 0385-115 | 2,5 | Rd 24 x 115 | 50 | 0,337 | 2,48 |
| 0385-120 | 2,5 | Rd 24 x 120 | 50 | 0,359 | 2,57 |
| 0385 | 2,5 | Rd 24 x 140 | 50 | 0,370 | 2,69 |
| 0389 | 2,5 | Rd 24 x 200 | 50 | 0,483 | 2,85 |
| 0386-120 | 4,0 | Rd 30 x 120 | 1 | 0,559 | 3,93 |
| 0386-150 | 4,0 | Rd 30 x 150 | 1 | 0,621 | 4,17 |
| 0386 | 4,0 | Rd 30 x 170 | 1 | 0,683 | 4,74 |

## Screw Anchor – stainless steel socket V2A

| art.-no. | load t | type d x h | pack. unit piece | weight kg/piece | price €/piece |
|---|---|---|---|---|---|
| 0380E | 0,5 | Rd 12 x 70 | 200 | 0,056 | 3,00 |
| 0381E | 0,8 | Rd 14 x 70 | 100 | 0,079 | 3,55 |
| 0382E | 1,2 | Rd 16 x 80 | 100 | 0,124 | 4,55 |
| 0383E | 1,6 | Rd 18 x 100 | 50 | 0,206 | 7,35 |
| 0384-90E | 2,0 | Rd 20 x 90 | 50 | 0,231 | 8,02 |
| 0384-100E | 2,0 | Rd 20 x 100 | 50 | 0,241 | 8,69 |
| 0384E | 2,0 | Rd 20 x 127 | 50 | 0,275 | 8,75 |
| 0388E | 2,5 | Rd 24 x 115 | 50 | 0,337 | 9,24 |
| 0385-120E | 2,5 | Rd 24 x 120 | 50 | 0,359 | 9,55 |
| 0385E | 2,5 | Rd 24 x 140 | 50 | 0,370 | 10,15 |
| 0386E | 4,0 | Rd 30 x 170 | 1 | 0,683 | 15,35 |

## Screw Anchor – stainless steel socket V4A

| art.-no. | load t | type d x h | pack. unit piece | price €/piece |
|---|---|---|---|---|
| 0387EE | 0,5 | Rd 12 x 60 | 200 | 4,74 |
| 0382EE | 0,5 | Rd 16 x 80 | 100 | 5,78 |
| 0384-100EE | 2,0 | Rd 20 x 100 | 50 | 9,41 |
| 0385EE | 2,5 | Rd 24 x 140 | 50 | 12,78 |
| 0386-150EE | 4,0 | Rd 30 x 150 | 1 | 18,02 |

# *BGW- Anchor system for recessed installation*

05/18(05/18)

Threaded rope loops are an economical alternative to screw-on attachment points. However, it often happens that the cable loop kinks when transverse and diagonal pull and a hidden rope break occurs. As a result, the safety of the next suit is no longer guaranteed.

For recessed installation, the recess is formed by BGW-HM4 centering cone. Such a conical recess prevents the kinking of the cable loop and thus a cable break. Furthermore, the cable loops are not kinked when stacking the precast concrete parts.

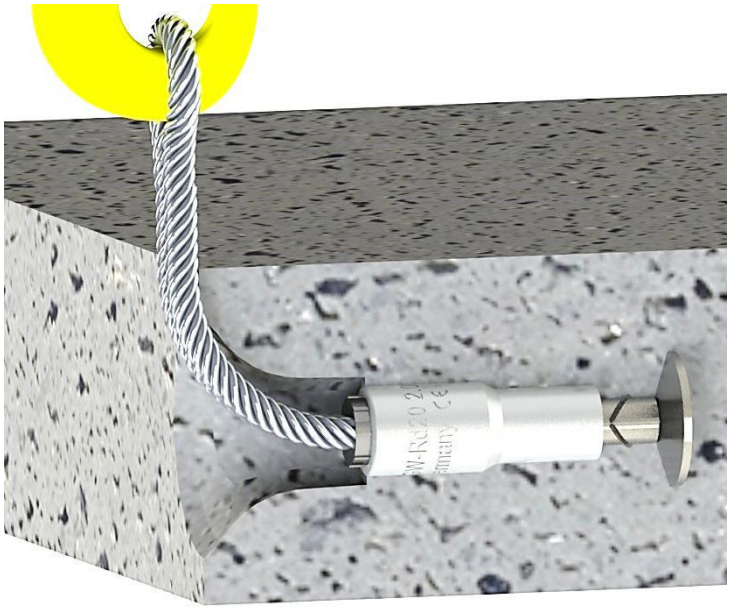

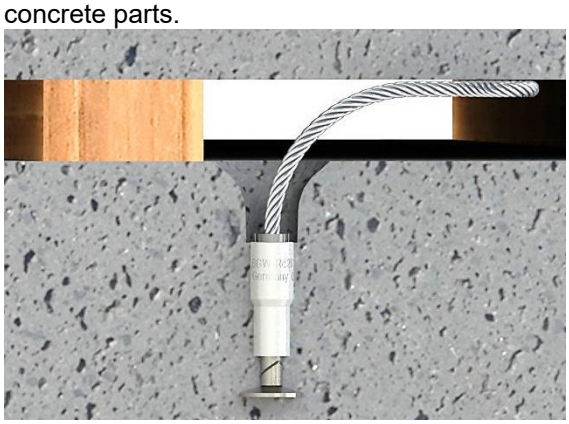

easily stackable

**BGW- Rib foot anchor - sleeve galvanized and chromated**

| Art.-Nr. | Load t | Typ d x h | Packaging Unit | Weight kg/pcs | Price €/Pcs |
|---|---|---|---|---|---|
| 0432 | 2,0 | Rd 20 x 90 | 50 | 0,22 | 2,10 |
| 0437 | 2,0 | Rd 20 x 170 | 50 | 0,32 | 2,40 |

**BGW-Connecting loops**

| Rd-Thread Art.-Nr. | Rd-Thread d x e | Rope Ø/mm DIN 3060 | Load [t] | h [mm] | Verp.-Einh. | Weight kg/Pcs | Price €/Pcs |
|---|---|---|---|---|---|---|---|
| 0658 | Rd 20 x 35 | 10 | 2,0 | 215 | 25 | 0,25 | 8,18 |

**BGW-HM4 Centering cone with magnets**

| Art.-Nr. | Thread | Weight kg/Pcs | Price €/Pcs |
|---|---|---|---|
| 13674 | M 20 | 0,27 | 108,00 |

**BGW-HM4 Centering cone with magnets**

| Art.-Nr. | Thread | Weight kg/Pcs | Price €/Pcs |
|---|---|---|---|
| 13676 | M 20 | 0,27 | 45,00 |

**BGW- Stainless steel cover for recesses**

| Art.-Nr. | Thread | Weight kg/Pcs | Price €/Pcs |
|---|---|---|---|
| 13673 | M 20 | 0,33 | 42,50 |

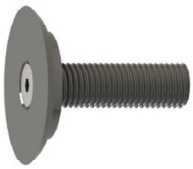

# BGW-Fixing Sockets and Quickie



The BGW-Fixing Sockets are by mean of their low height and the individual fixing possibilities suitable for fastening of pillars and props and for receiving axial forces.

Into the yellow galvanized or of stainless steel manufactured socket, a metric thread is cut in, which should be greased before the installation into the precast concrete unit.

For fastening to a steel formwork, BGW-magnetic holders type HM4 are recommended. To prevent dirt and concrete from penetrating into the thread of the socket, plastic stoppers respectively holding discs are used.

The static calculation can be based on material S235 or 1.4301.

## *BGW*-Fixing Socket - galvanized and chromated

| art.-no. | load t | type d x h | D mm | pack.-unit piece | weight kg/piece | price €/piece |
|---|---|---|---|---|---|---|
| 0700 | 0,10 | M 6 x 35 | 6 | 500 | 0,01 | 0,17 |
| 0702 | 0,20 | M 8 x 40 | 6 | 500 | 0,01 | 0,17 |
| 0703 | 0,20 | M 8 x 50 | 6 | 500 | 0,02 | 0,18 |
| 0704 | 0,35 | M 10 x 45 | 6 | 500 | 0,02 | 0,28 |
| 0704458 | 0,35 | M 10 x 45 | 8 | 500 | 0,02 | 0,28 |
| 0704-Loch10 | 0,35 | M 10 x 45 | 10 | 500 | 0,02 | 0,29 |
| 0705 | 0,35 | M 10 x 50 | 6 | 500 | 0,02 | 0,29 |
| 0706 | 0,35 | M 10 x 60 | 10 | 500 | 0,03 | 0,30 |
| 0847 | 0,35 | M 10 x 100 | 10 | 500 | 0,03 | 0,31 |
| 0708 | 0,50 | M 12 x 55 | 10 | 500 | 0,04 | 0,31 |
| 07081 | 0,50 | M 12 x 60 | 10 | 500 | 0,04 | 0,32 |
| 0710 | 0,50 | M 12 x 65 | 10 | 400 | 0,05 | 0,33 |
| 0710-1 | 0,50 | M 12 x 80 | 10 | 400 | 0,05 | 0,40 |
| 0710-4 | 0,50 | M 12 x 100 | 10 | 100 | 0,06 | 0,43 |
| 0710-5 | 0,50 | M 12 x 120 | 10 | 100 | 0,07 | 0,45 |
| 0710-2 | 0,50 | M 12 x 200 | 10 | 50 | 0,12 | 0,48 |
| 0870 | 0,50 | M 16 x 50 | without Loch | 250 | 0,05 | 0,49 |
| 0713 | 1,00 | M 16 x 70 | 12 | 250 | 0,07 | 0,50 |
| 0713-1 | 1,00 | M 16 x 75 | 14 | 200 | 0,07 | 0,51 |
| 0712 | 1,00 | M 16 x 80 | 12 | 200 | 0,09 | 0,51 |
| 0714 | 1,00 | M 16 x 100 | 12 | 150 | 0,12 | 0,59 |
| 0715 | 1,00 | M 16 x 120 | 12 | 150 | 0,12 | 0,67 |
| 0716 | 1,25 | M 20 x 100 | 13 | 150 | 0,18 | 0,87 |
| 0718 | 1,25 | M 20 x 120 | 13 | 100 | 0,22 | 0,92 |
| 0794 | 1,25 | M 20 x 150 | 13 | 50 | 0,24 | 1,30 |
| 0725 | 1,25 | M 20 x 240 | 13 | 50 | 0,38 | 1,91 |
| 0720 | 1,68 | M 24 x 120 | 17 | 50 | 0,26 | 1,64 |
| 0721 | 1,68 | M 24 x 150 | 17 | 40 | 0,53 | 2,46 |
| 0723 | 2,20 | M 30 x 150 | 22 | 25 | 0,63 | 3,12 |

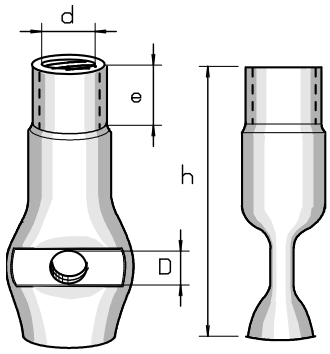


## *BGW*-Fixing Socket – stainless steel

| art.-no. | load t | type d x h | D mm | pack.-unit piece | weight kg/piece | price €/piece |
|---|---|---|---|---|---|---|
| 0700E | 0,10 | M 6 x 35 | 6 | 500 | 0,01 | 0,79 |
| 0700E-40 | 0,10 | M 6 x 40 | 6 | 500 | 0,01 | 0,79 |
| 0726 | 0,20 | M 8 x 40 | 6 | 500 | 0,01 | 0,79 |
| 0703E | 0,20 | M 8 x 50 | 6 | 500 | 0,02 | 0,84 |
| 0728 | 0,35 | M 10 x 45 | 6 | 100 | 0,02 | 0,96 |
| 0704458E | 0,35 | M 10 x 45 | 8 | 100 | 0,02 | 0,98 |
| 0707 | 0,35 | M 10 x 60 | 6 | 100 | 0,02 | 1,03 |
| 0847E | 0,35 | M 10 x 100 | 9 | 50 | 0,04 | 1,09 |
| 07082E | 0,50 | M 12 x 45 | 10 | 100 | 0,03 | 1,16 |
| 0730 | 0,50 | M 12 x 55 | 10 | 100 | 0,03 | 1,23 |
| 0731 | 0,50 | M 12 x 60 | 10 | 100 | 0,03 | 1,31 |
| 0732 | 0,50 | M 12 x 70 | 10 | 100 | 0,04 | 1,45 |
| 0710-1E | 0,50 | M 12 x 80 | 10 | 100 | 0,04 | 1,82 |
| 0796E | 0,50 | M 12 x 100 | 12 | 50 | 0,06 | 2,10 |
| 0734 | 1,00 | M 16 x 80 | 12 | 50 | 0,10 | 2,71 |
| 0736 | 1,00 | M 16 x 100 | 12 | 50 | 0,12 | 3,14 |
| 0737 | 1,00 | M 16 x 120 | 12 | 50 | 0,15 | 3,45 |
| 0738 | 1,25 | M 20 x 100 | 13 | 50 | 0,20 | 4,60 |
| 0740 | 1,68 | M 24 x 120 | 17 | 50 | 0,26 | 7,67 |

## *BGW*-Quickie

BGW-Quickie is a plastic dowel, which is glued to the steel formwork, and then is cast-in, to make the fixing of the pillars at the installation of the precast unit more comfortable. To fasten the pillar to the Quickie, a wood screw ∅ 12 x 70 mm is used, which is screwed in the Quickie, fully, using an electrical screwer.

| art.-no. | description | weight kg/piece | pack.-unit. piece | price €/piece |
|---|---|---|---|---|
| 5125 | for wood screw ∅ 12 mm | 0,030 | 500 | 0,61 |
| 5126 | for lightweight concrete – with 3 holes ∅ 7 for sewing | 0,037 | 900 | 0,82 |

# *BGW*-Fixing Socket with Nailing Plate

## *BGW*-Fixing Socket with Nailing Plate – galvanized and chromated

| art.-no. | load t | type d x h mm | d socket mm | D hole mm | P mm | Pd mm | g mm | pack.-unit piece | weight kg/piece | price €/piece |
|---|---|---|---|---|---|---|---|---|---|---|
| 0702NP | 0,20 | M 8 x 40 | 10,5 | 6,2 | 34 | 1-2 | 8 | 500 | 0,01 | 0,65 |
| 0703NP | 0,20 | M 8 x 50 | 10,5 | 6,2 | 34 | 1-2 | 8 | 500 | 0,01 | 0,70 |
| 07692NP | 0,35 | M 10 x 45 | 13,5 | 6,2 | 34 | 1-2 | 12 | 500 | 0,02 | 0,66 |
| 0705NP | 0,35 | M 10 x 50 | 13,5 | 6,2 | 34 | 1-2 | 12 | 500 | 0,02 | 0,68 |
| 0707NP | 0,35 | M 10 x 60 | 13,5 | 6,2 | 34 | 1-2 | 12 | 500 | 0,02 | 0,70 |
| 0708NP | 0,50 | M 12 x 55 | 17,0 | 10,0 | 40 | 1-2 | 15 | 500 | 0,04 | 0,89 |
| 0711 | 0,50 | M 12 x 60 | 17,0 | 10,0 | 40 | 1-2 | 15 | 500 | 0,04 | 0,91 |
| 0710NP | 0,50 | M 12 x 65 | 17,0 | 10,0 | 40 | 1-2 | 15 | 250 | 0,05 | 0,99 |
| 0710-1NP | 0,50 | M 12 x 80 | 17,0 | 10,0 | 40 | 1-2 | 15 | 250 | 0,05 | 1,10 |
| 0713NP | 1,00 | M 16 x 70 | 21,3 | 12,2 | 44 | 1-2 | 22 | 250 | 0,08 | 1,20 |
| 0712NP | 1,00 | M 16 x 80 | 21,3 | 12,2 | 44 | 1-2 | 22 | 150 | 0,12 | 1,25 |
| 0714NP-1 | 1,00 | M 16 x 100 | 21,3 | 12,2 | 44 | 1-2 | 22 | 150 | 0,14 | 1,56 |
| 0715NP | 1,00 | M 16 x 120 | 21,3 | 13,0 | 48 | 1-2 | 22 | 100 | 0,15 | 1,78 |
| 0739-1 | 1,25 | M 20 x 100 | 26,9 | 13,0 | 48 | 1-2 | 22 | 100 | 0,16 | 2,05 |
| 0718NP | 1,25 | M 20 x 120 | 26,9 | 13,0 | 48 | 1-2 | 22 | 50 | 0,21 | 2,25 |
| 0740NP | 1,68 | M 24 x 120 | 33,7 | 17,0 | 57 | 1-2 | 25 | 25 | 0,24 | 3,86 |

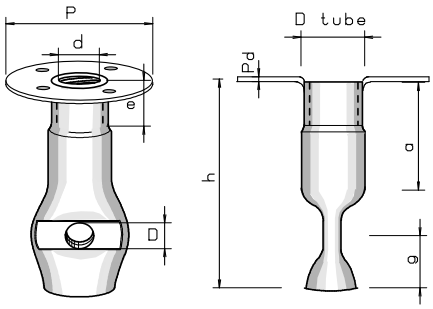


## *BGW*-Fixing Socket with Nailing Plate – stainless steel

| art.-no. | load t | type d x h mm | d socket mm | D hole mm | P mm | Pd mm | g mm | pack.-unit piece | weight kg/piece | price €/piece |
|---|---|---|---|---|---|---|---|---|---|---|
| 0702NPE | 0,20 | M 8 x 40 | 10,5 | 6,2 | 34 | 1-2 | 8 | 500 | 0,01 | 2,99 |
| 0707NPE | 0,35 | M 10 x 60 | 13,5 | 6,2 | 34 | 1-2 | 12 | 500 | 0,02 | 2,80 |
| 0730NP | 0,50 | M 12 x 55 | 17,0 | 10,0 | 40 | 1-2 | 15 | 250 | 0,04 | 3,60 |
| 0711NPE | 0,50 | M 12 x 60 | 17,0 | 10,0 | 40 | 1-2 | 15 | 250 | 0,04 | 3,64 |
| 0710NPE | 0,50 | M 12 x 65 | 17,0 | 10,0 | 40 | 1-2 | 15 | 250 | 0,05 | 3,96 |
| 0712NPE | 1,00 | M 16 x 80 | 21,3 | 12,2 | 44 | 1-2 | 22 | 150 | 0,12 | 6,25 |
| 0714NPE | 1,00 | M 16 x 100 | 21,3 | 12,2 | 44 | 1-2 | 22 | 150 | 0,14 | 7,80 |
| 0739 | 1,25 | M 20 x 100 | 26,9 | 13,0 | 48 | 1-2 | 22 | 100 | 0,16 | 10,25 |
| 0740NPE | 1,68 | M 24 x 120 | 33,7 | 17,0 | 57 | 1-2 | 25 | 25 | 0,24 | 13,51 |

# *BGW*-Fixing Socket with Nailing Plate and Crossbar



## *BGW*-Fixing Socket with Nailing Plate and Crossbar – *galvanized and chromated*

| art.-no. | load t | type d x h mm | d socket mm | D hole mm | P mm | Pd mm | g mm | pack.-unit piece | weight kg/piece | price €/piece |
|---|---|---|---|---|---|---|---|---|---|---|
| 0702NPQ | 0,20 | M 8 x 40 | 10,5 | 6,2 | 34 | 1-2 | 8 | 500 | 0,01 | 1,43 |
| 0703NPQ | 0,20 | M 8 x 50 | 10,5 | 6,2 | 34 | 1-2 | 8 | 500 | 0,01 | 1,45 |
| 0704NPQ | 0,35 | M 10 x 45 | 13,5 | 6,2 | 34 | 1-2 | 12 | 500 | 0,03 | 1,47 |
| 0705NPQ | 0,35 | M 10 x 50 | 13,5 | 6,2 | 34 | 1-2 | 12 | 500 | 0,03 | 1,63 |
| 0707NPQ | 0,35 | M 10 x 60 | 13,5 | 6,2 | 34 | 1-2 | 12 | 500 | 0,03 | 1,96 |
| 0770NP | 0,50 | M 12 x 55 | 17,0 | 10,0 | 40 | 1-2 | 15 | 200 | 0,09 | 1,68 |
| 0711Q | 0,50 | M 12 x 60 | 17,0 | 10,0 | 40 | 1-2 | 15 | 200 | 0,10 | 1,72 |
| 0710NPQ | 0,50 | M 12 x 65 | 17,0 | 10,0 | 40 | 1-2 | 15 | 250 | 0,06 | 1,77 |
| 0710-1NPQ | 0,50 | M 12 x 80 | 17,0 | 10,0 | 40 | 1-2 | 15 | 250 | 0,07 | 1,90 |
| 0713NPQ | 1,00 | M 16 x 70 | 21,3 | 12,2 | 44 | 1-2 | 22 | 150 | 0,13 | 2,80 |
| 0758NP | 1,00 | M 16 x 80 | 21,3 | 12,2 | 44 | 1-2 | 22 | 150 | 0,14 | 2,94 |
| 0760NPQ | 1,00 | M 16 x 100 | 21,3 | 12,2 | 44 | 1-2 | 22 | 100 | 0,16 | 3,41 |
| 0715NPQ | 1,00 | M 16 x 120 | 21,3 | 12,2 | 44 | 1-2 | 22 | 100 | 0,19 | 3,60 |
| 0739NPQ | 1,25 | M 20 x 100 | 26,9 | 13,0 | 48 | 1-2 | 22 | 100 | 0,21 | 4,30 |
| 0718NPQ | 1,25 | M 20 x 120 | 26,9 | 13,0 | 48 | 1-2 | 22 | 50 | 0,24 | 4,80 |

*(Crossbar standard made of non-galvanized rebar - galvanized bar on request)*

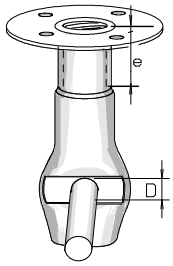


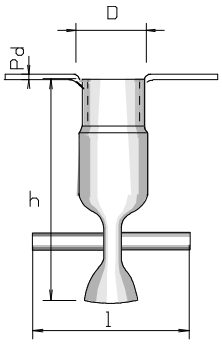


## *BGW*-Fixing Socket with Nailing Plate and Crossbar – stainless steel

| art.-no. | load t | type d x h mm | d socket mm | D hole mm | P mm | Pd mm | g mm | pack.-unit piece | weight kg/piece | price €/piece |
|---|---|---|---|---|---|---|---|---|---|---|
| 0769NPQ | 0,35 | M 10 x 45 | 13,5 | 6,2 | 34 | 1-2 | 12 | 500 | 0,03 | 5,88 |
| 0752NPQ | 0,35 | M 10 x 60 | 13,5 | 6,2 | 34 | 1-2 | 12 | 500 | 0,03 | 7,84 |
| 0770P | 0,50 | M 12 x 55 | 17,0 | 10,0 | 40 | 1-2 | | 200 | 0,09 | 8,40 |
| 0758NPQ | 1,00 | M 16 x 80 | 21,3 | 12,2 | 44 | 1-2 | 22 | 150 | 0,14 | 14,70 |

*(Crossbar standard made of non-galvanized rebar - stainless steel bar on request)*

# *BGW*-Fixing Socket with Crossbar



## *BGW*-Fixing Socket with Crossbar – galvanized and chromated

| art.-no. | load t | type d x h | crossbar D x L mm | pack.-unit piece | weight kg/piece | price €/piece |
|---|---|---|---|---|---|---|
| 0751 | 0,10 | M 6 x 35 | 6 x 50 | 500 | 0,02 | 0,66 |
| 0781 | 0,20 | M 8 x 40 | 6 x 50 | 500 | 0,02 | 0,71 |
| 0703Q | 0,20 | M 8 x 50 | 6 x 50 | 500 | 0,03 | 0,75 |
| 0750 | 0,35 | M 10 x 45 | 6 x 50 | 500 | 0,03 | 0,77 |
| 0753 | 0,35 | M 10 x 50 | 6 x 50 | 500 | 0,03 | 0,81 |
| 0752 | 0,35 | M 10 x 60 | 6 x 50 | 500 | 0,03 | 0,84 |
| 0754 | 0,50 | M 12 x 55 | 10 x 50 | 250 | 0,06 | 0,86 |
| 0755 | 0,50 | M 12 x 65 | 10 x 50 | 250 | 0,08 | 0,88 |
| 0756 | 0,50 | M 12 x 70 | 10 x 50 | 200 | 0,09 | 0,89 |
| 0758 | 1,00 | M 16 x 80 | 10 x 100 | 250 | 0,15 | 1,20 |
| 0760 | 1,00 | M 16 x 100 | 10 x 100 | 100 | 0,18 | 1,29 |
| 0759 | 1,00 | M 16 x 120 | 10 x 100 | 100 | 0,20 | 1,47 |
| 0762 | 1,25 | M 20 x 100 | 13 x 100 | 50 | 0,27 | 1,69 |
| 0764 | 1,25 | M 20 x 120 | 13 x 100 | 50 | 0,42 | 1,79 |
| 0766 | 1,68 | M 24 x 120 | 17 x 100 | 25 | 0,66 | 2,66 |
| 0782 | 2,20 | M 30 x 150 | 22 x 100 | 15 | 1,16 | 4,50 |

*(Crossbar standard made of non-galvanized rebar - galvanized bar on request)*

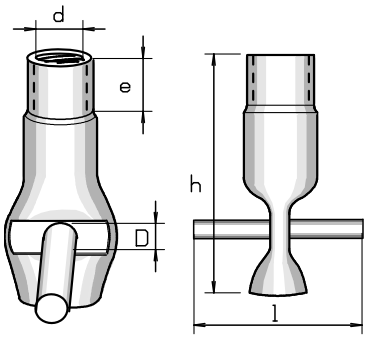


## *BGW*-Fixing Socket with Crossbar – stainless steel

| art.-no. | load t | type d x h | crossbar D x L mm | pack.-unit piece | weight kg/piece | price €/piece |
|---|---|---|---|---|---|---|
| 0700EQ | 0,10 | M 6 x 40 | 6 x 50 | 500 | 0,02 | 3,04 |
| 0726Q | 0,20 | M 8 x 40 | 6 x 50 | 500 | 0,03 | 3,27 |
| 0723Q | 0,20 | M 8 x 50 | 6 x 50 | 500 | 0,03 | 3,45 |
| 0769 | 0,35 | M 10 x 45 | 6 x 50 | 500 | 0,03 | 3,08 |
| 0770 | 0,50 | M 12 x 55 | 10 x 50 | 250 | 0,06 | 3,44 |
| 0771 | 0,50 | M 12 x 60 | 10 x 50 | 250 | 0,06 | 3,52 |
| 0772 | 0,50 | M 12 x 70 | 10 x 50 | 200 | 0,07 | 3,56 |
| 0710-3E | 0,50 | M 12 x 80 | 10 x 50 | 200 | 0,08 | 4,15 |
| 0774 | 1,00 | M 16 x 80 | 10 x 100 | 250 | 0,16 | 6,00 |
| 0776 | 1,00 | M 16 x 100 | 10 x 100 | 100 | 0,16 | 6,45 |
| 0777 | 1,00 | M 16 x 120 | 10 x 100 | 100 | 0,18 | 7,35 |
| 0778 | 1,25 | M 20 x 100 | 12 x 100 | 50 | 0,25 | 8,45 |
| 0779 | 1,25 | M 20 x 120 | 12 x 100 | 50 | 0,28 | 8,95 |
| 0780 | 1,68 | M 24 x 120 | 16 x 100 | 25 | 0,41 | 9,31 |

*(Crossbar standard made of non-galvanized rebar - stainless steel bar on request)*

# BGW-Fixing Socket Angled



## *BGW*-Fixing Socket Angled – galvanized and chromated

| art.-no. | load t | type d x h | n mm | pack.-unit piece | weight kg/piece | price €/piece |
|---|---|---|---|---|---|---|
| 0800 | 0,20 | M 8 x 30 | 25 | 500 | 0,01 | 0,52 |
| 0790 | 0,20 | M 8 x 35 | 25 | 500 | 0,01 | 0,55 |
| 0801 | 0,20 | M 8 x 50 | 25 | 500 | 0,02 | 0,58 |
| 0802 | 0,30 | M 10 x 35 | 25 | 500 | 0,03 | 0,64 |
| 0817 | 0,30 | M 10 x 45 | 25 | 250 | 0,05 | 0,69 |
| 08171 | 0,30 | M 10 x 60 | 30 | 250 | 0,05 | 0,74 |
| 0804 | 0,40 | M 12 x 45 | 25 | 250 | 0,05 | 0,71 |
| 0791 | 0,40 | M 12 x 55 | 35 | 250 | 0,05 | 0,73 |
| 0804-60 | 0,40 | M 12 x 60 | 35 | 250 | 0,06 | 0,75 |
| 0804-70 | 0,40 | M 12 x 70 | 35 | 250 | 0,07 | 0,85 |
| 0806 | 1,0 | M 16 x 60 | 35 | 250 | 0,08 | 0,83 |
| 0713-2 | 1,0 | M 16 x 70 | 20 | 250 | 0,09 | 0,85 |
| 0809 | 1,0 | M 16 x 80 | 35 | 100 | 0,11 | 0,86 |
| 0808 | 1,0 | M 16 x 90 | 35 | 100 | 0,12 | 0,93 |
| 0807 | 1,0 | M 16 x 100 | 35 | 100 | 0,16 | 0,99 |
| 0784 | 1,0 | M 16 x 250 | 40 | 50 | 0,29 | 1,24 |
| 0820 | 1,25 | M 20 x 70 | 35 | 100 | 0,17 | 1,41 |
| 0822 | 1,25 | M 20 x 100 | 35 | 100 | 0,18 | 1,46 |
| 0818 | 1,68 | M 24 x 80 | 35 | 50 | 0,30 | 1,68 |

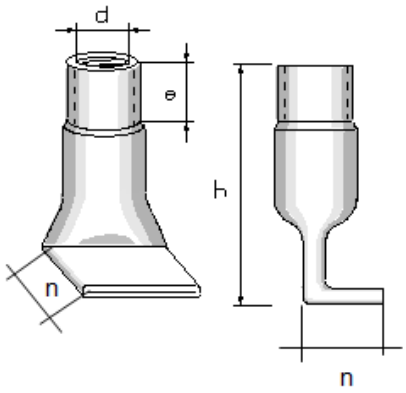


## *BGW*-Fixing Socket Angled – stainless steel

| art.-no. | load t | type d x h | n mm | pack.-unit piece | weight kg/piece | price €/piece |
|---|---|---|---|---|---|---|
| 0800E | 0,20 | M 8 x 30 | 25 | 500 | 0,01 | 2,39 |
| 0795 | 0,30 | M 10 x 35 | 25 | 500 | 0,02 | 2,56 |
| 0804E | 0,40 | M 12 x 45 | 25 | 250 | 0,04 | 2,84 |
| 0810 | 0,40 | M 12 x 70 | 35 | 250 | 0,07 | 3,40 |
| 0806E | 1,00 | M 16 x 60 | 35 | 100 | 0,09 | 4,15 |
| 0814 | 1,00 | M 16 x 80 | 35 | 100 | 0,11 | 4,30 |
| 0816 | 1,00 | M 16 x 100 | 35 | 100 | 0,13 | 4,95 |

# *BGW*-Fixing Socket Waved End



## *BGW*-Fixing Socket Waved End – galvanized and chromated

| art.-no. | load t | type d x h | pack.-unit piece | weight kg/piece | price kg/pcs |
|---|---|---|---|---|---|
| 0700W | 0,10 | M 6 x 35 | 500 | 0,01 | 0,13 |
| 0702 W | 0,20 | M 8 x 40 | 500 | 0,01 | 0,17 |
| 0703W | 0,20 | M 8 x 50 | 500 | 0,02 | 0,18 |
| 0703 60 W | 0,20 | M 8 x 60 | 500 | 0,02 | 0,19 |
| 0703 80 W | 0,20 | M 8 x 80 | 500 | 0,03 | 0,21 |
| 0704-1W | 0,35 | M 10 x 40 | 500 | 0,02 | 0,25 |
| 0705W | 0,35 | M 10 x 50 | 500 | 0,02 | 0,29 |
| 0706W | 0,35 | M 10 x 60 | 500 | 0,03 | 0,31 |
| 0709W | 0,50 | M 12 x 50 | 500 | 0,03 | 0,32 |
| 0710W | 0,50 | M 12 x 65 | 500 | 0,04 | 0,33 |
| 0710-1W | 0,50 | M 12 x 80 | 400 | 0,05 | 0,40 |
| 0710-4W | 0,50 | M 12 x 100 | 400 | 0,06 | 0,48 |
| 0719W | 1,00 | M 16 x 60 | 200 | 0,06 | 0,49 |
| 0712W | 1,00 | M 16 x 80 | 200 | 0,09 | 0,51 |
| 0714W | 1,00 | M 16 x 100 | 200 | 0,10 | 0,65 |
| 0716W | 1,25 | M 20 x 100 | 100 | 0,19 | 0,87 |
| 0720W | 1,68 | M 24 x 120 | 50 | 0,26 | 1,64 |

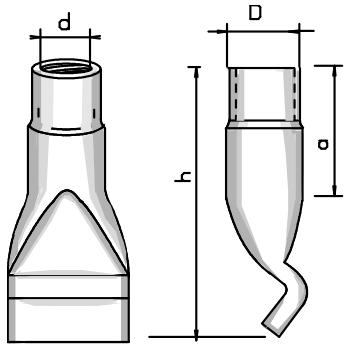


## *BGW*- Fixing Socket Waved End – stainless steel

| art.-no. | load t | type d x h | pack.-unit piece mm | weight kg/piece | price kg/pcs |
|---|---|---|---|---|---|
| 0701 | 0,10 | M 6 x 40 | 500 | 0,01 | 0,79 |
| 0703WE | 0,20 | M 8 x 50 | 500 | 0,02 | 0,92 |
| 0706WE | 0,35 | M 10 x 60 | 500 | 0,03 | 1,03 |
| 0731W | 0,50 | M 12 x 60 | 500 | 0,04 | 1,31 |
| 0734W | 1,00 | M 16 x 80 | 200 | 0,09 | 2,71 |
| 0736W | 1,00 | M 16 x 100 | 200 | 0,10 | 3,14 |
| 0738W | 1,25 | M 20 x 100 | 100 | 0,16 | 4,60 |
| 0739W | 1,68 | M 24 x 120 | 50 | 0,26 | 7,67 |

# *BGW*-Fixing Socket with Nailing Plate and Waved End

## *BGW*-Fixing Socket with Nailing Plate and Waved End – galvanized and chromated

| art.-no. | load t | type d x h mm | d socket mm | D hole mm | P mm | Pd mm | g mm | pack.-unit piece | weight kg/pcs | price €/pcs |
|---|---|---|---|---|---|---|---|---|---|---|
| 0706NP | 0,35 | M 10 x 60 | 13,5 | 6,2 | 34 | 1-2 | 12 | 500 | 0,03 | 0,70 |
| 0711NP | 0,50 | M 12 x 60 | 17,0 | 10,0 | 40 | 1-2 | 15 | 250 | 0,06 | 0,91 |
| 0710NPW | 0,50 | M 12 x 65 | 17,0 | 10,0 | 40 | 1-2 | 15 | 250 | 0,07 | 0,99 |
| 0714NP | 1,00 | M 16 x 80 | 21,3 | 12,2 | 44 | 1-2 | 22 | 200 | 0,12 | 1,25 |
| 0760NPW | 1,00 | M 16 x 100 | 21,3 | 12,2 | 44 | 1-2 | 22 | 150 | 0,14 | 1,56 |
| 0716NP | 1,25 | M 20 x 100 | 26,9 | 13,0 | 48 | 1-2 | 22 | 100 | 0,16 | 2,05 |
| 0720NP | 1,68 | M 24 x 120 | 33,7 | 17,0 | 57 | 1-2 | 25 | 50 | 0,22 | 3,86 |

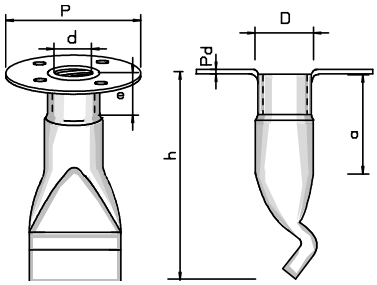


## *BGW*- Fixing Socket with Nailing Plate and Waved End – stainless steel

| art.-no. | load t | type d x h mm | d socket mm | D hole mm | P mm | Pd mm | g mm | pack.-unit piece | weight kg/pcs | price €/pcs |
|---|---|---|---|---|---|---|---|---|---|---|
| 0705NPE | 0,20 | M 8 x 40 | 10,5 | 6,2 | 34 | 1-2 | 8 | 500 | 0,02 | 2,99 |
| 0706NPE | 0,35 | M 10 x 60 | 13,5 | 6,2 | 34 | 1-2 | 12 | 500 | 0,03 | 2,80 |
| 0713NPE | 0,50 | M 12 x 60 | 17,0 | 10,0 | 40 | 1-2 | 15 | 500 | 0,06 | 3,64 |
| 0710NPWE | 0,50 | M 12 x 65 | 17,0 | 10,0 | 40 | 1-2 | 15 | 250 | 0,07 | 3,96 |
| 0714NPWE | 1,00 | M 16 x 80 | 21,3 | 12,2 | 44 | 1-2 | 22 | 200 | 0,12 | 6,25 |
| 0760NPWE | 1,00 | M 16 x 100 | 21,3 | 12,2 | 44 | 1-2 | 22 | 150 | 0,14 | 7,80 |
| 0716NPE | 1,25 | M 20 x 100 | 26,9 | 13,0 | 48 | 1-2 | 22 | 100 | 0,16 | 10,25 |
| 0720NPE | 1,68 | M 24 x 120 | 33,7 | 17,0 | 57 | 1-2 | 25 | 50 | 0,22 | 13,51 |

# *BGW*-reinforcement connections

06/18(06/18)

## female bars (mother)

| art.-no. | rebars Ø s [mm] | length l [mm] | thread M | weight [kg] | price €/piece |
|---|---|---|---|---|---|
| 70007 | 10 | 1000 | M 12 | 0,64 | 3,22 |
| 7000 | 12 | 570 | M 16 | 0,57 | 2,44 |
| 7002 | 12 | 800 | M 16 | 0,77 | 3,00 |
| 7004 | 14 | 660 | M 18 | 0,90 | 4,92 |
| 7006 | 14 | 930 | M 18 | 1,20 | 5,72 |
| 7008 | 16 | 1020 | M 20 | 1,74 | 6,70 |
| 7010 | 16 | 1440 | M 20 | 2,41 | 7,80 |
| 7012 | 20 | 1280 | M 24 | 3,39 | 9,07 |
| 7014 | 20 | 1800 | M 24 | 4,67 | 11,35 |
| 7016 | 25 | 1600 | M 30 | 6,52 | 15,53 |
| 7018 | 25 | 2260 | M 30 | 9,06 | 20,14 |
| 7020 | 28 | 1790 | M 36 | 9,26 | 20,57 |
| 7022 | 28 | 2530 | M 36 | 12,84 | 27,26 |
| 70221 | 32 | 1400 | M 42 | 9,70 | 31,63 |
| 7023-1600 | 40 | 1600 | M 48 | 17,70 | 49,63 |

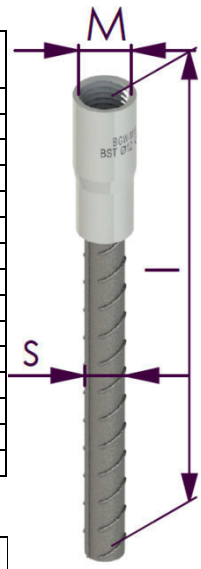


## Price for additional work

(quantity at least 50 pieces):

Bending of Rebar: 0,75 € / piece
Shorten of Rebar: 0,75 € / piece

*The lengths can be changed, according to your special installation case.*

**Test report bars:**
*http://www.bgw-bohr.de/pdf/Pr%FCfzeugnisBewehrungsanschluss.pdf*

## male bars (father) type 1

| art.-no. | rebars Ø s [mm] | length l [mm] | thread M | weight [kg] | price €/piece |
|---|---|---|---|---|---|
| 7059-1000 | 10 | 1000 | M 12 | 0,69 | 3,58 |
| 7024 | 12 | 570 | M 16 | 0,64 | 3,41 |
| 7026 | 12 | 800 | M 16 | 0,83 | 4,03 |
| 7028 | 14 | 660 | M 18 | 0,98 | 5,93 |
| 7030 | 14 | 930 | M 18 | 1,30 | 6,65 |
| 7032 | 16 | 1020 | M 20 | 1,90 | 6,96 |
| 7034 | 16 | 1440 | M 20 | 2,56 | 8,45 |
| 7036 | 20 | 1280 | M 24 | 3,63 | 10,97 |
| 7038 | 20 | 1800 | M 24 | 4,92 | 13,10 |
| 7040 | 25 | 1600 | M 30 | 6,99 | 17,62 |
| 7042 | 25 | 2260 | M 30 | 9,53 | 22,99 |
| 7044 | 28 | 1790 | M 36 | 9,46 | 25,54 |
| 7046 | 28 | 2530 | M 36 | 13,15 | 30,88 |
| 7048 | 32 | 1400 | M 42 | 11,22 | 39,77 |
| 7049-1600 | 40 | 1600 | M 48 | 18,21 | 59,33 |

## male bars (father) type 2

| art.-no. | rebars Ø s [mm] | length l [mm] | thread M | weight [kg] | price €/piece |
|---|---|---|---|---|---|
| 700101000 | 10 | 1000 | M 12 | 0,63 | 5,30 |
| 70012570 | 12 | 570 | M 16 | 0,53 | 5,90 |
| 70012800 | 12 | 800 | M 16 | 0,73 | 6,82 |
| 70014660 | 14 | 660 | M 18 | 0,80 | 6,22 |
| 70014930 | 14 | 930 | M 18 | 1,16 | 7,01 |
| 700161020 | 16 | 1020 | M 20 | 1,65 | 8,21 |
| 700161440 | 16 | 1440 | M 20 | 2,31 | 9,50 |
| 700201280 | 20 | 1280 | M 24 | 3,26 | 11,30 |
| 700201800 | 20 | 1800 | M 24 | 4,54 | 13,80 |
| 700251600 | 25 | 1600 | M 30 | 6,32 | 17,14 |
| 700252260 | 25 | 2260 | M 30 | 8,86 | 22,01 |
| 700281790 | 28 | 1790 | M 36 | 8,84 | 22,63 |
| 700282530 | 28 | 2530 | M 36 | 12,41 | 29,40 |
| 700321400 | 32 | 1400 | M 42 | 9,09 | 23,47 |
| 700401600 | 40 | 1600 | M 48 | 16,18 | 37,44 |

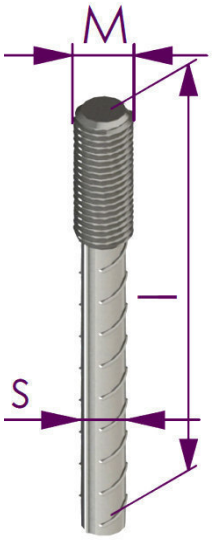


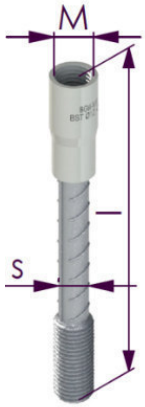


## Double socket bars

| art.-no. | rebars Ø s [mm] | length l [mm] | thread M | weight [kg] | price €/piece |
|---|---|---|---|---|---|
| 7068 | 1000 | 10 | M 12 | 0,64 | 2,77 |
| 7070 | 500 | 12 | M 16 | 0,58 | 3,29 |
| 7072 | 500 | 14 | M 18 | 0,75 | 4,58 |
| 7074 | 500 | 16 | M 20 | 1,04 | 6,79 |
| 7076 | 500 | 20 | M 24 | 1,69 | 8,62 |
| 7078 | 500 | 25 | M 30 | 2,63 | 12,19 |
| 7080 | 500 | 28 | M 36 | 3,64 | 13,78 |
| 7081 | 1150 | 32 | M 42 | 8,98 | 33,05 |
| 7082 | 1000 | 40 | M 48 | 13,40 | 56,50 |

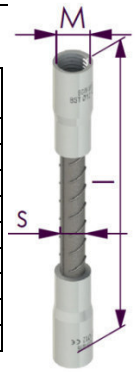


## hermaphrodite connector

| art.-no. | rebars Ø s [mm] | length l [mm] | thread M | weight [kg] | price €/piece |
|---|---|---|---|---|---|
| 7088 | 1000 | 10 | M 12 | 0,65 | 2,78 |
| 7090 | 1000 | 12 | M 16 | 1,08 | 5,35 |
| 7092 | 1000 | 14 | M 18 | 1,45 | 8,52 |
| 7094 | 1000 | 16 | M 20 | 2,00 | 9,41 |
| 7096 | 1000 | 20 | M 24 | 3,15 | 12,32 |
| 7098 | 1000 | 25 | M 30 | 5,03 | 17,16 |
| 7099 | 1000 | 28 | M 36 | 6,86 | 23,66 |
| 7089 | 1370 | 32 | M 42 | 11,57 | 38,93 |

# *BGW*-Masonry-, Crutch- und Liapor Anchor

09/06(04/17)

## Masonry Anchor

The material BST 500 S with pressed-on rope loop made of galvanized steel rope is especially suitable for the transport of prefabricated masonry and liapor products. The anchor lengths can be changed to your specific installation case upon request.

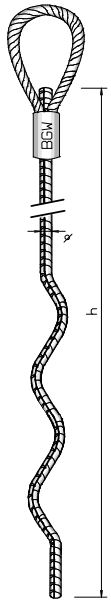


### Masonry Anchor – waved end design

| art.-no. | load kg | height h mm | price €/piece | weight KG |
|---|---|---|---|---|
| 4000 | 1200 | 2600 | 1,84 | 1,22 |
| 4002 | 1500 | 2600 | 2,30 | 1,74 |
| 4004 | 2300 | 2600 | 2,66 | 2,45 |
| 4006 | 3200 | 2600 | 3,99 | 3,48 |
| 4008 | 4000 | 2600 | 4,70 | 4,55 |
| 4010 | 4000 | 2000 | 4,40 | 3,88 |

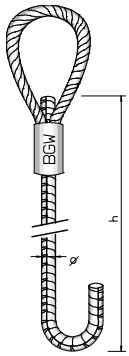


### Masonry Anchor – crutch design

| art.-no. | load kg | height h mm | price €/piece |
|---|---|---|---|
| 4020 | 1200 | 2600 | 1,84 |
| 4022 | 1500 | 2600 | 2,30 |
| 4024 | 2300 | 2600 | 2,66 |
| 4026 | 3200 | 2600 | 3,99 |
| 4028 | 4000 | 2600 | 4,70 |
| 4027 | 4000 | 2000 | 4,55 |

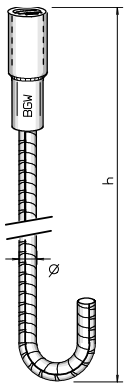


### Crutch Anchor with lifting insert

| art.-no. | load | type d x h | packing unit pieces | price €/piece |
|---|---|---|---|---|
| 05900 | 0,5 | Rd 12 x 180 | 100 | 1,79 |
| 05902 | 0,8 | Rd 14 x 250 | 100 | 2,16 |
| 05904 | 1,2 | Rd 16 x 310 | 100 | 2,59 |
| 05906 | 1,6 | Rd 18 x 350 | 50 | 3,50 |
| 05908 | 2,0 | Rd 20 x 380 | 50 | 4,30 |
| 05910 | 2,5 | Rd 24 x 490 | 25 | 5,25 |
| 05912 | 4,0 | Rd 30 x 630 | 1 | 9,40 |
| 05914 | 6,3 | Rd 36 x 790 | 1 | 15,65 |
| 05916 | 8,0 | Rd 42 x 860 | 1 | 27,20 |

## Liapor anchor with welded base plate for load suspension

The anchor lengths, as well as the size of the foot plate, can be changed to their specific installation case. Further welding parts on request.

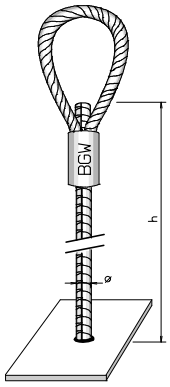


### Liapor anchor with rope loop and welded foot plate

| art.-no. | load kg | height h mm | price €/piece |
|---|---|---|---|
| 4760 | 1200 | 1000 | on demand |
| 4762 | 1500 | 1000 | |
| 4764 | 2300 | 1000 | |
| 4766 | 3200 | 1000 | |
| 4768 | 4000 | 1000 | |

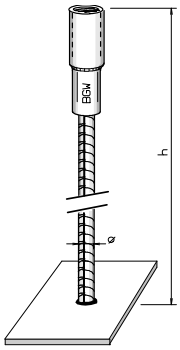


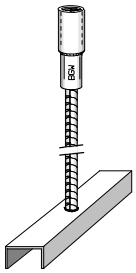


variant with u-profile on demand

### Liapor anchor with lifting insert and welded base plate

| art.-no. | load kg | thread Rd | height h mm | price €/piece |
|---|---|---|---|---|
| 4720 | 1200 | 16 | 1000 | on demand |
| 4722 | 1600 | 18 | 1000 | |
| 4724 | 2000 | 20 | 1000 | |
| 4726 | 2500 | 24 | 1000 | |
| 4728 | 4000 | 30 | 1000 | |
| 4730 | 6300 | 36 | 1000 | |

# BGW- FBA Transport Anchor, the heavy slender Flat Steel Rebar Anchor

The BGW-FBA Transport Anchor with Flat Steel Rebar is particularly suitable where there is no space for conventional transport anchors between the reinforcement of the precast concrete part. This is especially true for thin walls and large cross sections of the supporting reinforcement. Due to the geometry of the flat steel, the armature and the reinforcement do not interfere with each other. This allows more concrete coverage, so that a permissible minimum concrete cover according to DIN EN 1992 can be maintained even with thin walls.

**Rundstahl Bewehrung**

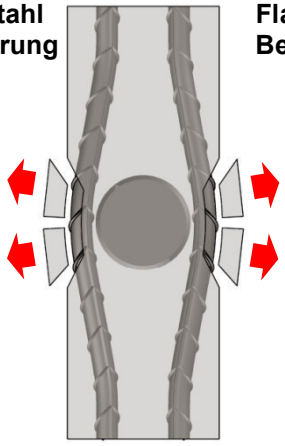

**Flachstahl Bewehrung**

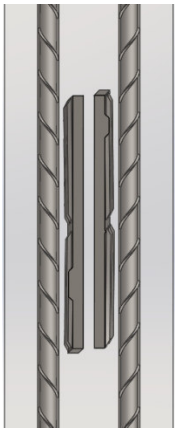

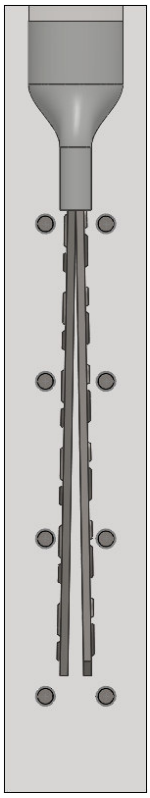

The transport anchor consists of a threaded sleeve, in which an associated load-carrying means is screwed, and from the flat steel reinforcement by which the anchor is anchored in the concrete. The steel cross section of the flat steel rebar depends on the corresponding load stage of the transport anchor.

Another advantage is the larger contact surface between concrete and anchor. As a result, a better distribution of force in the concrete is achieved than with anchors with normal rebar of the same cross-section. For this reason, the BGW transport anchor with flat steel rebar also offers the greatest possible resistance to pulling out or tearing out.

For safe anchoring in concrete, the shape and surface condition of the flat steel reinforcement are decisive. Therefore, the surface of the flat steel reinforcement is corrugated. The shape of the flat steel reinforcement is tapered towards the threaded sleeve.

## Advantages:

- **Compliance with permissible concrete cover fort hin walls according to DIN EN 1992**
- **Higher load capacity due to larger contact surface**
- **More safety during transport due to higher concrete cover**
- **Outstanding anchoring in concrete**

Before installation, the threaded sleeve should be closed by means of sealing plugs. The concrete grade must be min. C25 / 30. The pulling direction is axial (linear to the armature).
en

**Anchor distances in the concrete**

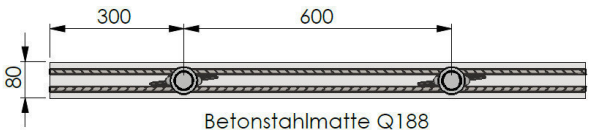


**BGW-FBA Transportanchor with flat steel rebar**

| art.-no. | load [t] | thread Rd | thread length e [mm] | sleeve Ø d [mm] | length l [mm] | flat steel width b [mm] | flat steel thickness | distance f/m[mm] | weight kg | price €/piece |
|---|---|---|---|---|---|---|---|---|---|---|
| 0116FBA | 4 | 30 | 56 | 38 | 500 | 45 | 4 | 5 | 1,85 | 9,83 |
| 0120FBA | 6,3 | 36 | 69 | 48 | 650 | 56 | 5 | 5 | 3,80 | 16,67 |
| 0124FBA | 8 | 42 | 80 | 54 | 800 | 71 | 5 | 5 | 5,60 | 24,12 |

# *BGW-Fixing Insert, reinforced*

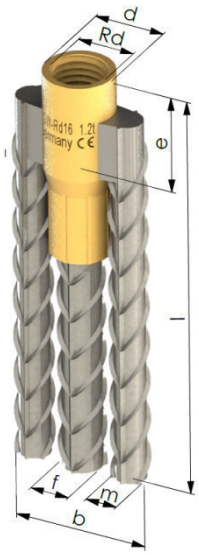


Similar to BGW-FBA flat steel rebar anchors, the BGW-fixing insert is especially suitable for installation in thin concrete components.

In order to achieve the steel load stage of the transport anchor, additional supporting rebars are welded to the threaded sleeve with the rebars pressed in laterally. By dividing the steel cross-section on several anchor rods, the anchoring surface of the anchoring rods is increased in the concrete, where increases by the load bearing at the same anchor width.

Before installation, the threaded sleeve should be closed by means of sealing plugs.
The concrete grade must be min. C25 / 30. The pulling direction is axial (linear to the armature).

**Anker Abstände in Beton**

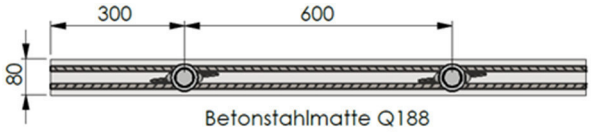


**BGW-Stabanker verstärkt**

| art.-no. | load [t] | thread Rd | thread length e [mm] | sleeve Ø d [mm] | length l mm | pressed in middle bar Ø f [mm] | welded outer rod Ø m [mm] | weight kg | price €/piece |
|---|---|---|---|---|---|---|---|---|---|
| 0116V | 4 | 30 | 56 | 38 | 500 | 14 | 12 | 2,20 | 10,20 |
| 0120V | 6,3 | 36 | 69 | 48 | 650 | 16 | 12 | 3,40 | 16,20 |
| 0124V | 8 | 42 | 80 | 54 | 800 | 20 | 14 | 5,60 | 24,30 |

# *BGW*-holding discs, *BGW*-screw plug



## *BGW*-holding discs

The ***BGW*-holding discs** serve for quick fastening of our sockets to a wooden formwork.
With ***BGW*-plastic holding discs** a concrete of 10 mm is reached. That way penetration of dirt and concrete into the socket is prevented and clean plastering after the installation of the precast unit is made possible.

On the inside oft he screw plugs stainless steel (fittings quality) you have to spread silicone.
So the screw plug is pressed into the thread of the anchor which should be closed.
It must be flush with the concrete component.

## *BGW*-plastic holding discs (Nailing plate)

| art.-no. | thread M/Rd | concrete cover mm | Ø D1 mm | Ø D2 mm | packaging unit | price €/piece |
|---|---|---|---|---|---|---|
| 090140 | 10 | 10 | 40 | 30 | 250 | 0,20 € |
| 090040 | 12 | 10 | 40 | 30 | 250 | 0,20 € |
| 0903 | 14 | 10 | 40 | 30 | 250 | 0,23 € |
| 0904 | 16 | 10 | 55 | 45 | 250 | 0,23 € |
| 0906 | 18 | 10 | 55 | 45 | 250 | 0,23 € |
| 0908 | 20 | 10 | 55 | 45 | 250 | 0,24 € |
| 0910 | 24 | 10 | 55 | 45 | 250 | 0,25 € |
| 0912 | 30 | 10 | 70 | 60 | 250 | 0,29 € |
| 0914 | 36 | 10 | 70 | 60 | 1 | 0,80 € |
| 0916 | 42 | 12 | 96 | 86 | 1 | 1,30 € |
| 0918 | 52 | 12 | 96 | 86 | 1 | 1,60 € |

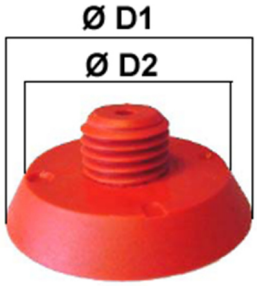


## BGW-key for plastic holding discs

| art.-no. | thread M/Rd | Price €/piece |
|---|---|---|
| 0913 | 10 – 24 | 4,60 |
| 09131 | 30 – 36 | 4,60 |
| 09132 | 42 – 52 | 4,60 |

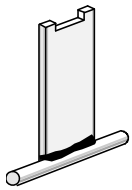

## *BGW*-stainless steel Cover

**for holding discs alternatively each Ø for gluing** (fixing with silicone)

| art.-no. | concrete cover mm | Ø D1 mm | price €/piece |
|---|---|---|---|
| 0911 | 2 | 46 | 8,00 € |
| 09111 | 2 | 53 | 8,00 € |

## *BGW*-Screw plug stainless steel (faucet surface) for plastic holding discs, HM4

| art.-no. | thread M/Rd | Ø D1 mm | Ø D2 mm | price €/piece |
|---|---|---|---|---|
| 0901-VE | 10 | 39,0 | 29,0 | 21,30 € |
| 0900-VE | 12 | 39,0 | 29,0 | 21,40 € |
| 0903-VE | 14 | 39,0 | 29,0 | 21,60 € |
| 0904-VE | 16 | 54,0 | 44,0 | 22,80 € |
| 0905-VE | 18 | 54,0 | 44,0 | 30,20 € |
| 0908-VE | 20 | 54,0 | 44,0 | 30,25 € |
| 0910-VE | 24 | 54,0 | 44,0 | 38,55 € |
| 0912-VE | 30 | 69,0 | 59,0 | 46,85 € |
| 0914-VE | 36 | 69,0 | 59,0 | 54,00 € |
| 0916-VE | 42 | 95,0 | 85,0 | 85,00 € |
| 0918-VE | 52 | 95,0 | 85,0 | 85,00 € |
| 0900-12-E | M12 | 64,5 | 59,5 | 35,30 € |
| 0900-16-E | M16 | 64,5 | 59,5 | 38,20 € |
| 0900-20-E | M20 | 64,5 | 59,5 | 42,50 € |
| 0900-24-E | M24 | 64,5 | 59,5 | 44,40 € |
| 0900-30-E | M30 | 64,5 | 59,5 | 46,00 € |

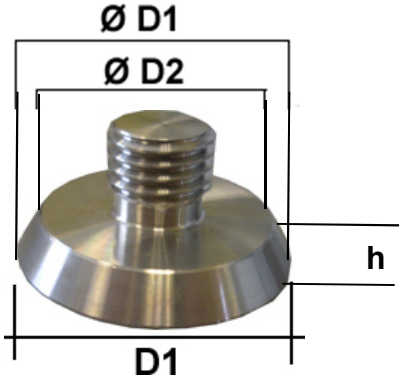


***BGW*-Screw plug in stainless steel, for HM4**

## *BGW*- Holding disc for gluing, made of plastic

| art.-no. | thread | concrete cover d mm | Ø D1 mm | Ø D2 mm | packaging unit | price €/piece |
|---|---|---|---|---|---|---|
| 090040-KL | M 12 | 3,5 | 48 | 45 | 250 | 0,20 € |
| 0904-KL | M 16 | 3,5 | 48 | 45 | 250 | 0,23 € |
| 0908-KL | M 20 | 3,5 | 48 | 45 | 250 | 0,24 € |

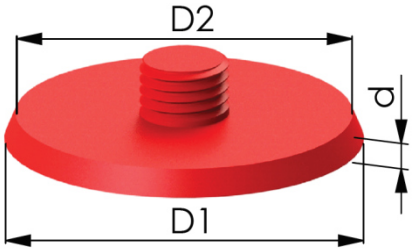

# *BGW*-holding discs, *BGW*-screw plug, *BGW*-plastic stoppers



## *BGW*-screw plug for centering screw stainless steel

| art.-no. | M/Rd | Ø D1 mm | price €/piece |
|---|---|---|---|
| 0920E | 12 | Ø22 | 9,35 € |
| 0902E | 14 | Ø25 | 10,60 € |
| 0924E | 16 | Ø29 | 12,25 € |
| 0926E | 18 | Ø32 | 13,65 € |
| 0909E | 20 | Ø36 | 15,50 € |
| 0928E | 24 | Ø40 | 19,95 € |
| 0930E | 30 | Ø48 | 23,45 € |
| 0932E | 36 | Ø58 | 29,65 € |
| 0934E | 42 | Ø66 | 38,45 € |
| 0936E | 52 | Ø80 | 48,40 € |

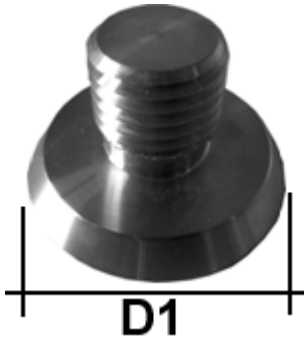


## *BGW*-plastic stoppers for push-it

***BGW*-plastic stopper** are used to close our transport anchors, to prevent contamination of the threads.
(Packing unit: 1,000 pieces)

| art.-no. | thread M/Rd | d | h | price €/1000 pieces |
|---|---|---|---|---|
| 0950 | 12 | 14,4 | 5,5 | 60,00 € |
| 0952 | 14 | 18,7 | 7 | 70,00 € |
| 0954 | 16 | 18,7 | 7 | 70,00 € |
| 0956 | 18 | 24,6 | 9 | 80,00 € |
| 0958 | 20 | 24 | 9 | 80,00 € |
| 0960 | 24 | 28,5 | 9 | 90,00 € |
| 0962 | 30 | 33 | 11 | 130,00 € |
| 0964 | 36 | 36 | 12 | 140,00 € |
| 0966 | 42 | 45 | 12 | 280,00 € |
| 0968 | 52 | 56 | 20 | 330,00 € |

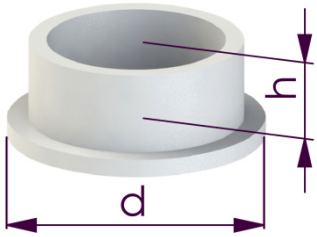


## *BGW*-holding pin plastic

for recessed installation of threaded anchors for higher corrosion resistance and higher concrete cover

| art.-no. | thread M | concrete cover d mm | Ø D1 mm | packaging unit | price €/piece |
|---|---|---|---|---|---|
| 5660 | M12 | 15 mm | Ø27 | 250 | 0,41 € |
| 5661 | M16 | 15 mm | Ø27 | 250 | 0,47 € |
| 5662 | M20 | 15 mm | Ø27 | 250 | 0,49 € |
| 5663 | M24 | 15 mm | Ø27 | 250 | 0,52 € |

## *BGW*-holding pin made of steel, magnetic, galvanized
**(for Allen key SW 6)**

for recessed installation of threaded anchors for higher corrosion resistance and higher concrete cover

| art.-no. | thread M | concrete cover d mm | Ø D1 mm | weight kg | pack. unit | price €/piece |
|---|---|---|---|---|---|---|
| 56601 | M12 | 15 mm | Ø27 | 0,075 | 1 | 48,- |
| 56611 | M16 | 15 mm | Ø27 | 0,082 | 1 | 48,- |
| 56621 | M20 | 15 mm | Ø27 | 0,102 | 1 | 48,- |
| 56631 | M24 | 15 mm | Ø27 | 0,123 | 1 | 48,- |

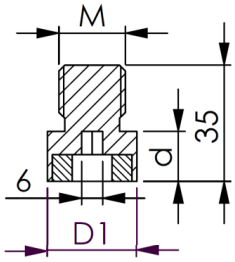

## *BGW*-plastic stoppers for holding pin in stainless steel with slot

| art.-no. | thread M | concrete cover d mm | Ø D1 mm | weight kg | pack. unit | price €/piece |
|---|---|---|---|---|---|---|
| 56601V | M12 | 15 mm | Ø26 | 0,075 | 1 | 15,30 € |
| 56611V | M16 | 15 mm | Ø26 | 0,082 | 1 | 17,80 € |
| 56621V | M20 | 15 mm | Ø26 | 0,102 | 1 | 19,30 € |
| 56631V | M24 | 15 mm | Ø26 | 0,123 | 1 | 21,70 € |

# *BGW*-Template / Casting Mold for locking discs 08/19(11/18)

With the aid oft he BGW-Template / Casting Mold, you can cast your own locking discs in your own concrete coller. The locking disc is glued into the recess and thus closed.

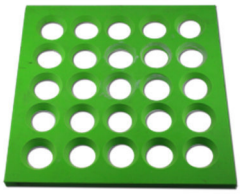

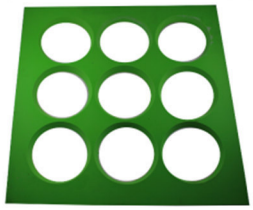

### Template for the recess of BGW-holding discs (threaded anchor)

| art.-no. | thread M/ Rd | ∅ D1 mm | ∅ D2 mm | mold cavity | price €/piece |
|---|---|---|---|---|---|
| 090 | 10/12/14 | 40 | 30 | 25 | 70,00 |
| 091 | 16/18/20/24 | 55 | 45 | 16 | 70,00 |
| 092 | 30/36 | 70 | 60 | 16 | 70,00 |
| 093 | 42/52 | 96 | 86 | 9 | 70,00 |

### Template for the recess of BGW-Capstan lifters

| art.-no. | Capstan Lifter | ∅ D1 mm | ∅ D2 mm | mold cavity | price €/piece |
|---|---|---|---|---|---|
| 0907 | 1,3 | 59 | 53 | 16 | 75,00 |
| 09010 | 2,5 | 73 | 67 | 9 | 75,00 |
| 09011 | 4 - 5 | 93 | 86 | 9 | 75,00 |
| 09012 | 7,5 - 10 | 116 | 108 | 9 | 75,00 |
| 09013 | 12 – 20 | 155 | 150 | 4 | 70,00 |
| 09015 | 32 | 215 | 203 | 1 | 50,00 |

# *BGW*-locking discs

The fiberglass-reinforced locking discs in exposed concrete quality is glued into the recess of the BGW-holding discs and thus closed. Locking discs are also available for all HM4 magnets.

### BGW-locking discs for the recess of BGW-holding discs (threaded anchor)

| art.-no. | thread M/ Rd | Ø D1 mm | ∅ D2 mm | price €/piece |
|---|---|---|---|---|
| 09120 | 10/12/14 | 40 | 30 | 1,09 |
| 09122 | 16/18/20/24 | 55 | 45 | 1,29 |
| 09124 | 30/36 | 70 | 60 | 2,39 |
| 09126 | 42/52 | 96 | 86 | 3,20 |
| 09127 | 12/30 | 65 | 60 | 1,35 |

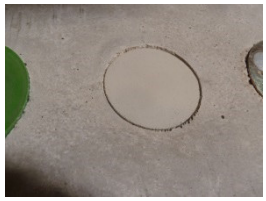

### BGW-locking discs for the recess of BGW-Capstan Lifters

| art.-no. | Capstan Lifter | Ø D1 mm | ∅ D2 mm | weight kg/piece. | price €/piece |
|---|---|---|---|---|---|
| 09128 | 1,3 | 59 | 53 | 0,07 | 2,20 |
| 09129 | 2,5 | 73 | 67 | 0,125 | 4,30 |
| 091210 | 4 – 5 | 93 | 86 | 0,270 | 9,20 |
| 091211 | 7,5 – 10 | 116 | 108 | 0,425 | 14,50 |
| 091212 | 12 – 20 | 155 | 150 | 0,710 | 24,14 |
| 091213 | 32 | 215 | 203 | 2,5 | 85,00 |

# Marking of fixing insert



## *BGW*-Data Ring

***BGW***-Data Rings are used to identify fixing insert after installation **(see Safety Rules BGR 106)**. The ***BGW***-Data Ring is made of differently colored plastic. The color of the ***BGW***-Data Ring for the fixing insert is in accordance with the color coding of the load handling device (rope loop).

### Installation and use instructions:

The ***BGW***-Data Ring is an important part of the ***BGW***-fixing insert system and is used to mark fixing inserts after installation. The data ring is placed between the transport anchor and the fixing plates. The fixing plates fixes the transport anchor during the concreting process. It can be made of plastic or steel or it can be magnetic. When setting in concrete, the writing of the data ring must point to the fixing plate. The fixing plate and the data ring are bolted firmly to the anchor. After stripping the precast concrete part and after removing the fixing plate, the technical values of the cast in transport anchor are clearly legible on the data ring.

**For every load level**

| art.-no. | thread M/Rd | color | D1/ mm | D2/ mm | weight kg/100 pcs. | pack.-unit piece | price €/ 100 pieces |
|---|---|---|---|---|---|---|---|
| 56951 | 12 | pastel orange | 21 | 12 | 0,04 | 100 | 10,00 |
| 56953 | 14 | pure white | 25 | 14 | 0,05 | 100 | 11,00 |
| 56954 | 16 | fire red | 27 | 17 | 0,06 | 100 | 12,00 |
| 56955 | 18 | light pink | 31 | 19 | 0,08 | 100 | 12,00 |
| 56956 | 20 | white green | 33 | 21 | 0,10 | 100 | 13,00 |
| 56957 | 24 | anthracite gray | 38 | 26 | 0,12 | 100 | 20,00 |
| 56958 | 30 | emerald | 48 | 32 | 0,17 | 100 | 24,00 |
| 56959 | 36 | light blue | 54 | 38 | 0,22 | 100 | 31,00 |
| 56971 | 42 | silver gray | 59 | 44 | 0,27 | 100 | 43,00 |
| 56972 | 52 | sulfur yellow | 76 | 54 | 0,44 | 100 | 84,00 |

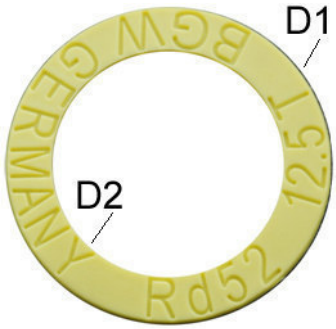

# Marking of fixing insert



## BGW-Dataclip

BGW-Dataclips are used to uniquely identify the type of anchor, load level and manufacturer of threaded anchors according to the safety rules of the BGR 106. The BGW-Dataclip is made of differently colored plastic. The color of the BGW-Dataclip for the anchor bolt transport anchor is in accordance with the color coding of the load handling device. Furthermore, the diameter on the dataclip is noted which must have the diagonal pull to be able to be fixed.

**Installation and use instructions:**
The BGW-Dataclip is an important component of the BGW thread transport anchor system and is used to mark threaded transport anchors after installation. The dataclip is pressed onto the sleeve of the transport anchor. The retaining disc fixes the transport anchor during the concreting process. The retaining disk and the dataclip are firmly screwed to the anchor. After stripping the precast concrete part and removing the retaining disc, the technical values of the cast-in transport anchor are clearly legible on the dataclip. The open jaws of the BGW-Dataclip are used to fasten steel reinforcements to the transport anchor. For this purpose, the diagonal tensile reinforcement in the lateral retaining claws is easily and quickly attached to the transport anchor sleeve. To avoid folding over, the diagonal tensile reinforcement should be fixed at the free end. The same applies to the transverse tensile reinforcement. This prevents lateral drifting off of the reinforcement.

| art.-no. | anchor type | Ø Bst. 500S mm | color | load t | weight kg / pack.-unit | pack.-unit | price € / 100pcs. |
|---|---|---|---|---|---|---|---|
| 569511 | Rd 12 | 6 | pastel orange | 0,5 | 0,12 | 100 | 15,00 |
| 569531 | Rd 14 | 6 | pure white | 0,8 | 0,15 | 100 | 16,00 |
| 569541 | Rd 16 | 8 | fire red | 1,2 | 0,18 | 100 | 18,00 |
| 569551 | Rd 18 | 8 | light pink | 1,6 | 0,31 | 100 | 18,00 |
| 569561 | Rd 20 | 8 | white green | 2,0 | 0,33 | 100 | 20,00 |
| 569571 | Rd 24 | 10 | antracit gray | 2,5 | 0,36 | 100 | 30,00 |
| 569581 | Rd 30 | 12 | emerald | 4,0 | 0,87 | 100 | 34,00 |
| 569591 | Rd 36 | 14 | light blue | 6,3 | 1,20 | 100 | 45,00 |
| 569711 | Rd 42 | 16 | silver gray | 8,0 | 1,35 | 100 | 65,00 |
| 569721 | Rd 52 | 20 | sulfar yellow | 12,5 | 2,25 | 100 | 115,00 |

# BGW-Transportation Loop

***BGW*-transportation loops** are used, for example, for transporting concrete shafts, round tanks and light shafts. They are bolted to the cast-in transport anchors (e.g., flat steel or bolt anchors) in conjunction with screws of the appropriate thread.

## *BGW*-transportation loop

| art.-no. | load t | colour | for thread M / Rd | total length l mm | price €/piece |
|---|---|---|---|---|---|
| 0681 | 2,0 | white green | 16 | 280 | 5,35 |
| 0682 | 4,0 | emerald | 24 | 310 | 7,25 |
| 0683 | 5,2 | curry yellow | 30 | 390 | 13,75 |
| 06831 | 6,3 | light blue | 36 | 525 | 18,49 |

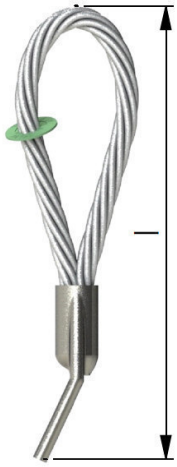


## Hex bolt

| art-no. | hex bolts d x h | price €/piece |
|---|---|---|
| 562430 | M 16 x 40 mm | 0,42 |
| 56914 | M 24 x 50 mm | 1,79 |
| 569030 | M 30 x 70 mm | on demand |
| 569036 | M 36 x 80 mm | on demand |

## *BGW*-Screw anchor – socket galvanized

| art.-no. | load t | type d x h | packaging unit pieces | price €/piece |
|---|---|---|---|---|
| 0380-55 | 0,5 | Rd 12 x 55 | 200 | 0,83 |
| 0387 | 0,5 | Rd 12 x 60 | 200 | 0,89 |
| 0380 | 0,5 | Rd 12 x 70 | 200 | 1,03 |
| 0381 | 0,8 | Rd 14 x 70 | 100 | 1,10 |
| 0382-70 | 1,2 | Rd 16 x 70 | 100 | 1,15 |
| 0382 | 1,2 | Rd 16 x 80 | 100 | 1,21 |
| 0382-105 | 1,2 | Rd 16 x 105 | 100 | 1,44 |
| 0382-118 | 1,2 | Rd 16 x 118 | 100 | 1,57 |
| 0383-90 | 1,6 | Rd 18 x 90 | 50 | 1,64 |
| 0383 | 1,6 | Rd 18 x 100 | 50 | 1,71 |
| 0384-80 | 2,0 | Rd 20 x 80 | 50 | 1,89 |
| 0384-90 | 2,0 | Rd 20 x 90 | 50 | 2,03 |
| 0384-100 | 2,0 | Rd 20 x 100 | 50 | 2,10 |
| 0384-107 | 2,0 | Rd 20 x 107 | 50 | 2,14 |
| 0384 | 2,0 | Rd 20 x 127 | 50 | 2,16 |
| 0385-115 | 2,5 | Rd 24 x 115 | 50 | 2,48 |
| 0385-120 | 2,5 | Rd 24 x 120 | 50 | 2,57 |
| 0385 | 2,5 | Rd 24 x 140 | 50 | 2,69 |
| 0389 | 2,5 | Rd 24 x 200 | 50 | 2,85 |
| 0386-120 | 4,0 | Rd 30 x 120 | 1 | 3,93 |
| 0386-150 | 4,0 | Rd 30 x 150 | 1 | 4,17 |
| 0386 | 4,0 | Rd 30 x 170 | 1 | 4,74 |

# BGW-Sling Swivel for diagonal and cross pass lift

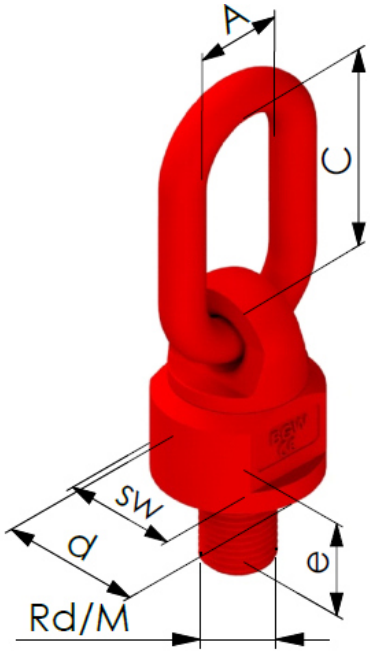


**Characteristics:**
- compact and easy construction
- robust stable, long-living
- ball bearing-swivel joint
- low space needed
- fast installation
- no alignment in the direction of pull as the pick-up member can be turned to the correct position

**EG/EC declaration of conformity:**
http://bgw-bohr.de/pdf/CE_Zeichen/EG-Konf_BGW-Anschlagwirbel_alle_Laststufen.pdf

**Application Notes:**
- the surface has to be flat
- tighten with a spanner DIN 695, 894 hand-tight
- Observe accident prevention regulations VBG 9a § 42
- Sling swivel suitable for M and Rd sleeves

The values can be taken from the illustrated diagonal pull table.

| M-thread | | Rd-thread | | | | Maximum load / t at: | | | | | | |
|---|---|---|---|---|---|---|---|---|---|---|---|---|
| art.-no. | thread M | art.-no. | thread Rd | load t | outer-Ø d[mm] | 90° | 0° | e mm | key width sw | link AxC[mm] | weight kg | price €/piece |
| 0600 | M10 | - | - | 0,30 | 36,0 | 0,45 | 0,9 | 19 | 30 | 30 x 55 | 0,509 | 37,02 |
| 0602 | M12 | 0689 | Rd12 | 0,50 | 36,0 | 0,50 | 1,0 | 19 | 30 | 30 x 55 | 0,468 | 39,32 |
| - | - | 06891 | Rd12 | 0,50 | 36,0 | 0,50 | 1,0 | 19 | 30 | 51 x 95 | 0,600 | 39,32 |
| 0604 | M14 | 0690 | Rd14 | 0,80 | 36,0 | 0,50 | 1,0 | 21 | 30 | 30 x 55 | 0,478 | 42,23 |
| 0606 | M16 | 0691 | Rd16 | 1,20 | 36,0 | 1,25 | 2,0 | 21 | 30 | 30 x 55 | 0,485 | 47,14 |
| - | - | 06911 | Rd16 | 1,20 | 36,0 | 1,25 | 2,0 | 21 | 30 | 60 x 110 | 0,666 | 47,14 |
| 0608 | M18 | 0692 | Rd18 | 1,60 | 50,0 | 1,25 | 2,0 | 31 | 30 | 30 x 55 | 0,503 | 52,66 |
| 0610 | M20 | 0693 | Rd20 | 2,00 | 50,0 | 2,00 | 4,0 | 31 | 30 | 35 x 70 | 0,936 | 61,61 |
| - | - | 06931 | Rd20 | 2,00 | 50,0 | 2,00 | 4,0 | 31 | 30 | 60 x 110 | 1,152 | 61,61 |
| 0612 | M24 | 0694 | Rd24 | 2,50 | 57,0 | 3,15 | 6,3 | 35 | 46 | 40 x 85 | 1,493 | 64,68 |
| - | - | 06941 | Rd24 | 2,50 | 57,0 | 3,15 | 6,3 | 35 | 46 | 75 x 135 | 1,756 | 64,68 |
| 0614 | M30 | 0695 | Rd30 | 4,00 | 66,0 | 5,30 | 10,6 | 45 | 46 | 40 x 85 | 2,297 | 91,27 |
| 0616 | M36 | 0696 | Rd36 | 6,30 | 80,0 | 8,00 | 11,8 | 54 | 65 | 50 x 115 | 3,758 | 116,06 |
| 0618 | M42 | 0697 | Rd42 | 8,00 | 80,0 | 10,00 | 15,0 | 62 | 80 | 50 x 115 | 4,130 | 176,40 |
| 0620 | M52 | 0698 | Rd52 | 12,50 | 80,0 | 10,00 | 15,0 | 68 | 80 | 50 x 115 | 4,710 | 437,50 |

*Design changes reserved*

# *BGW*-Lifting Shackle for Threaded Anchors

| art.-no. | load t | thread /mm | Ø B /mm | L x g /mm | D1 /mm | h /mm | l /mm | price €/piece |
|---|---|---|---|---|---|---|---|---|
| P-0218-1 | 22,0 | Rd 48 | 36 | 60 x 48 | 120 | 25 | 430 | 500,00 |
| P-0218-52 | 12,5 | Rd 52 | 36 | 60 x 52 | 120 | 25 | 430 | 500,00 |
| P-0273 | 15,0 | Rd 56 | 36 | 60 x 56 | 120 | 25 | 430 | 500,00 |
| P-0218-60 | 20,0 | Rd 60 | 36 | 60 x 60 | 120 | 25 | 430 | 500,00 |

# *BGW*-lifting loop

10/18(09/18)

***BGW*-lifting loops** with pressed-on threaded piece are available with Rd or M thread depending on the load stage and on the type of anchor.

The data carrier located on the lifting loops is color matched to the corresponding Rd anchor. A diagonal pull up to 45 ° is possible. The ***BGW***-lifting loops is such a favorable sling that in most cases a search is not worthwhile.

*Please note:*
The thread of the lifting loop must always be screwed in until the threaded end of the lifting loop. Lifting loops should be replaced in the event of wire breaks, damage to the thread, bruising, corrosion scars or kinking. Assessment at least once a year by an expert (UVV VBG 9a § 42).

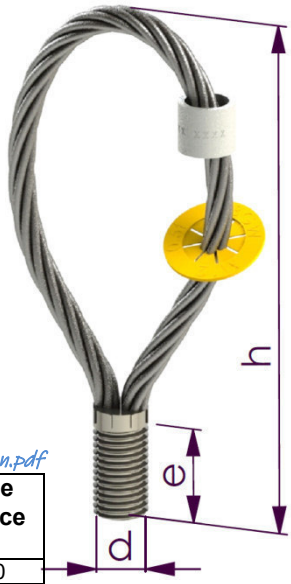


**For Information:**
***BGW***-lifting loops with threaded piece was first described in the test report no. 2930652 / I - 293065 / IX and MK2301174 by the LGA Bavaria on sections 4.4.3. Safety rules for transport anchors tested and approved – at *www.BGW-Bohr.de*. Product monitoring through production monitoring / first production approval for new

## *BGW*-lifting loop

EG-Konformitätserklärung: *http://www.bgw-bohr.de/pdf/CE_Zeichen/EG-Konf_BGW-Seilschlaufe_alle_Laststufen.pdf*

| M-thread d x e | art.-no. | Rd-thread d x e | art.-no. | rope Ø/mm DIN 3060 | load t | weight kg | height mm | packaging. unit piece | price €/piece |
|---|---|---|---|---|---|---|---|---|---|
| M 8 x 18 | 0647 | - | - | 3 | 0,2 | 0,006 | 110 | 50 | 4,50 |
| M 10 x 20 | 0649 | - | - | 5 | 0,4 | 0,04 | 130 | 25 | 4,00 |
| M 12 x 22 | 0651 | Rd 12 x 22 | 0650 | 6 | 0,5 | 0,07 | 155 | 25 | 4,09 |
| M 14 x 24 | 0653 | Rd 14 x 24 | 0652 | 7 | 0,8 | 0,08 | 155 | 25 | 4,19 |
| M 16 x 27 | 0655 | Rd 16 x 27 | 0654 | 8 | 1,2 | 0,13 | 155 | 25 | 5,78 |
| M 18 x 34 | 0657 | Rd 18 x 34 | 0656 | 9 | 1,6 | 0,18 | 190 | 25 | 6,90 |
| M 20 x 35 | 0659 | Rd 20 x 35 | 0658 | 10 | 2,0 | 0,25 | 215 | 25 | 8,18 |
| M 24 x 37 | 0661 | Rd 24 x 37 | 0660 | 12 | 2,5 | 0,40 | 255 | 25 | 9,36 |
| M 30 x 50 | 0663 | Rd 30 x 50 | 0662 | 16 | 4,0 | 0,75 | 300 | 10 | 14,67 |
| M 36 x 65 | 0665 | Rd 36 x 65 | 0664 | 18 | 6,3 | 1,27 | 340 | 10 | 28,27 |
| M 42 x 70 | 0667 | Rd 42 x 70 | 0666 | 20 | 8,0 | 1,90 | 425 | 1 | 35,84 |
| M 52 x 80 | 06691 | Rd 52 x 80 | 0668 | 26 | 12,5 | 3,51 | 480 | 1 | 58,80 |

# *BGW*-lifting loop Goliath with forged head

## For cross pass and diagonal pull

### rope with O-grouting

| M-thread d | Art.-Nr. | Rd-thread d | Art.-Nr. | load t | height H mm | ∅ S rope mm | Ø supporting surface a/mm | Ø L mm | PU piece. | price €/piece |
|---|---|---|---|---|---|---|---|---|---|---|
| M 12 | 0651G | Rd 12 | 0650G | 0,5 | 200 | 8 | 25 | 150 | 2 | 18,41 |
| M 16 | 0655G | Rd 16 | 0654G | 1,2 | 215 | 8 | 25 | 170 | 2 | 23,52 |
| M 20 | 0659G | Rd 20 | 0658G | 2,0 | 280 | 10 | 45 | 200 | 2 | 33,23 |
| M 24 | 0661G | Rd 24 | 0660G | 2,5 | 360 | 12 | 45 | 250 | 2 | 35,79 |
| M 30 | 0663G | Rd 30 | 0662G | 4,0 | 390 | 16 | 45 | 290 | 2 | 41,93 |
| M 36 | 0665G | Rd 36 | 0664G | 6,3 | - | 18 | 75 | - | 2 | 127,82 |
| M 42 | 0667G | Rd 42 | 0666G | 8,0 | - | 20 | 75 | - | 2 | 163,61 |
| M 52 | 0669G | Rd 52 | 0668G | 12,5 | - | 26 | 75 | - | 2 | 230,08 |

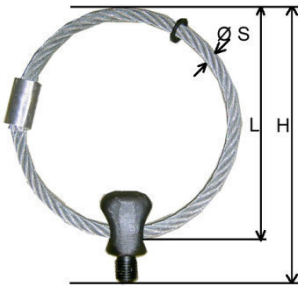


### rope with 8-grouting

EG-Konformitätserklärung:
*http://www.bgw-bohr.de/pdf/CE_Zeichen/EG-Konf_BGW-Seilschlaufe_Goliath-8-Verpressung_alle_Laststufen.pdf*

| M-thread d | Art.-Nr. | Rd-thread d | Art.-Nr. | load t | height H mm | ∅ S rope mm | Ø supporting surface a/mm | PU piece. | price €/piece |
|---|---|---|---|---|---|---|---|---|---|
| M 12 | 0651G8 | Rd 12 | 0650G8 | 0,5 | 335 | 8 | 25 | 2 | 18,41 |
| M 16 | 0655G8 | Rd 16 | 0654G8 | 1,2 | 385 | 8 | 25 | 2 | 23,52 |
| M 20 | 0659G8 | Rd 20 | 0658G8 | 2,0 | 470 | 10 | 45 | 2 | 33,23 |
| M 24 | 0661G8 | Rd 24 | 0660G8 | 2,5 | 550 | 12 | 45 | 2 | 35,79 |
| M 30 | 0663G8 | Rd 30 | 0662G8 | 4,0 | 590 | 16 | 45 | 2 | 41,93 |
| M 36 | 0665G8 | Rd 36 | 0664G8 | 6,3 | 780 | 18 | 75 | 2 | 127,82 |
| M 42 | 0667G8 | Rd 42 | 0666G8 | 8,0 | 860 | 20 | 75 | 2 | 163,61 |
| M 52 | 0669G8 | Rd 52 | 0668G8 | 12,5 | 1080 | 26 | 75 | 2 | 230,08 |

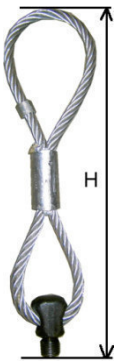

# *BGW*-Lifting Loop Goliath with Forged Head and Pressure Plate



For a deepened installation of the anchors we recommend the BGW-Holding Plate with marking. By the corresponding recess former the complete edition of the matching pressure plate is ensured on the concrete surface.

**Rope with 8-grouting**

| art.-no. | thread | Ø plate mm | load t | maximum load / t at 90°: | length h mm | Ø rope mm | packaging unit | price €/piece |
|---|---|---|---|---|---|---|---|---|
| 0650G8-D | Rd 12 | Ø 46 | 0,5 | 0,25 | 335 | 8 | 2 | 42,84 |
| 0654G8-D | Rd 16 | Ø 54 | 1,2 | 0,60 | 385 | 8 | 2 | 59,58 |
| 0658G8-D | Rd 20 | Ø 68 | 2,0 | 1,00 | 470 | 10 | 2 | 71,46 |
| 0660G8-D | Rd 24 | Ø 72 | 2,5 | 1,25 | 550 | 12 | 2 | 84,33 |
| 0662G8-D | Rd 30 | Ø 88 | 4,0 | 2,00 | 590 | 16 | 2 | 100,80 |
| 0664G8-D | Rd 36 | Ø 99 | 6,3 | 3,15 | 780 | 18 | 2 | 145,35 |
| 0666G8-D | Rd 42 | Ø 107 | 8,0 | 4,00 | 860 | 20 | 2 | 196,20 |
| 0668G8-D | Rd 52 | Ø 120 | 12,5 | 6,25 | 1080 | 26 | 2 | 315,90 |

***BGW***-Holding Plate with marking

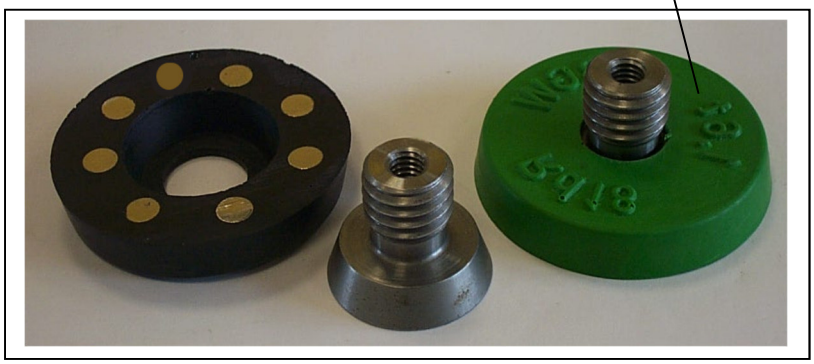

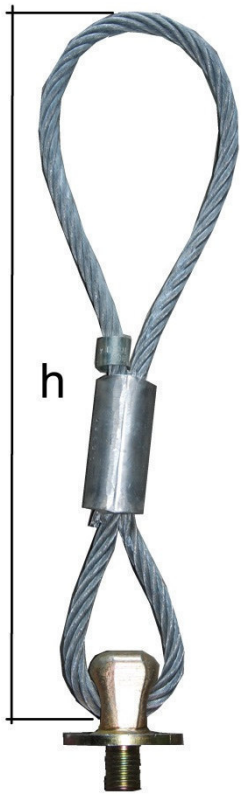


***BGW***-Lifting Loop with forged head and pressure plate

# *BGW*-Distance Holder for double walls

08/16(02/01)

## Distance Holder ∅ 10 mm with cap (cross)

it's a build-in part, which for production of double walls will require, so that fixing the desirable wall strength.
At installation the cross must be right-angled in concrete first, which takes the pressure at concrete the second shell.
Per wall build in ca 6 pieces.

| art.-no. | wall strength mm | weight kg ca. | package unit piece | price €/piece |
|---|---|---|---|---|
| 5153 | 170 | 0,160 | 3000 | 0,51 |
| 5141 | 180 | 0,166 | 3000 | 0,51 |
| 5146 | 190 | 0,173 | 3000 | 0,52 |
| 5140 | 200 | 0,179 | 3000 | 0,52 |
| 5150 | 210 | 0,185 | 3000 | 0,55 |
| 5165 | 220 | 0,191 | 3000 | 0,56 |
| 5151 | 230 | 0,197 | 3000 | 0,56 |
| 5142 | 240 | 0,204 | 3000 | 0,57 |
| 5143 | 250 | 0,210 | 3000 | 0,57 |
| 5144 | 300 | 0,241 | 3000 | 0,61 |
| 5152 | 320 | 0,253 | 3000 | 0,63 |
| 5149 | 340 | 0,265 | 3000 | 0,64 |
| 5159 | 350 | 0,271 | 3000 | 0,64 |
| 5145 | 360 | 0,278 | 3000 | 0,66 |
| 5160 | 400 | 0,302 | 3000 | 0,69 |

## distance holder ∅ 8 mm with claw (up to the top strap 8 mm or 10 mm)

it's a build in part, which for production of double walls will require. So that fixing the desirable wall strength.
At installation the claw will be putted right-angled to the shuttering at the lattice-girder and poured the first shell.
At concrete the second shell takes the surface of the concrete claw the pressure of the first shell.
Build-in quantities: into each corner and all 2 to 3 m distance.

| art.-no. -OG 8 mm | wall strength mm | weight kg ca. | package unit piece | price €/piece |
|---|---|---|---|---|
| 5200 | 180 | 0,072 | 3000 | 0,48 |
| 5202 | 200 | 0,080 | 3000 | 0,48 |
| 5204 | 240 | 0,095 | 3000 | 0,52 |
| 5206 | 250 | 0,099 | 3000 | 0,54 |
| 5208 | 300 | 0,119 | 3000 | 0,58 |
| 5210 | 350 | 0,139 | 3000 | 0,63 |
| 5212 | 360 | 0,143 | 3000 | 0,64 |

| art.-no. -OG 10 mm | wall-strength mm | weight kg ca. | package unit piece | price €/piece |
|---|---|---|---|---|
| 5220 | 180 | 0,072 | 3000 | 0,54 |
| 5222 | 200 | 0,080 | 3000 | 0,54 |
| 5224 | 240 | 0,095 | 3000 | 0,57 |
| 5226 | 250 | 0,099 | 3000 | 0,60 |
| 5228 | 300 | 0,119 | 3000 | 0,64 |
| 5230 | 350 | 0,139 | 3000 | 0,70 |
| 5232 | 360 | 0,143 | 3000 | 0,72 |

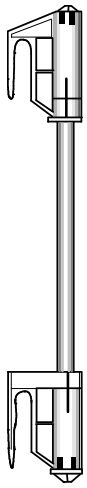

## distance holder model „hering"

it's a build-in part, which for production of double walls will require, so that fixing the desirable wall strength.
At installation the claw will be putted right-angled to the shuttering at the lattice-girder and poured the first shell.
At concrete the second shell takes the surface of the concrete ring the pressure of the first shell.
Build-in quantities: into each corner and all 2 to 3 m distance.

| art.-no. | wall strength mm | weight kg ca. | package unit piece ca. | price €/piece |
|---|---|---|---|---|
| 5300 | 180 | 0,042 | 3500 | 0,64 |
| 5301 | 200 | 0,042 | 3200 | 0,66 |
| 5302 | 240 | 0,062 | 3000 | 0,69 |
| 5303 | 300 | 0,062 | 2700 | 0,75 |

***Further lengths on request!***

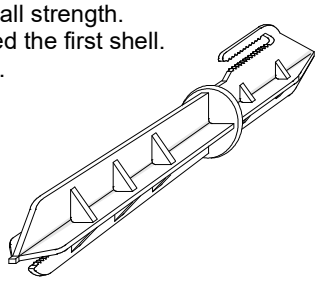

## Installation supply

**plastic Quickie for wood screw ∅ 12 mm**

| art.-no. | Quickie ∅ | weight | package unit | €/piece |
|---|---|---|---|---|
| 5125 | for ∅ 12 mm | 0,030 kg | 1100 pieces | 0,61 |
| 5126 | Liapor | 0,037 kg | 900 pieces | 0,82 |

**ringanchor M 16**

| art.-no. | thread | weight | package unit | €/piece |
|---|---|---|---|---|
| 0004 | M 16 | 0,105 kg | 250 pieces | 1,23 |

**plug M 16 x 50**

| art.-no. | thread | weight | package unit | €/piece |
|---|---|---|---|---|
| 0870 | M 16 | 0,060 kg | 250 pieces | 0,49 |

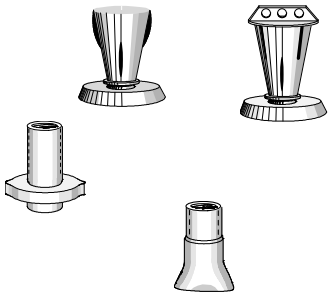

# Type-tested Transport Anchors for Double walls



BGW-Double Wall Anchor

BGW-Double wall anchor are used for transporting and moving double walls.
The anchors consist of a stirrup and a transverse bar, which are made of highly ductile ribbed steel BST 500 S.

The transport anchors were embedded in double-shelled concrete bodies and subjected to extraction tests until they were broken. The tests were carried out with regard to centric tensile load, diagonal tensile stress and transverse tensile stress. Based on these tests, the BGW lifting anchors can be used for load levels up to 8.8 t.

BGW-Double wall anchor are manufactured in Germany, whereby we can guarantee short delivery times, even for small quantities. We can produce the transport anchors according to your requirements or use our type-tested BGW transport anchors for double walls type 2 or type 3.

**The load capacity tables of our type-tested BGW transport anchors for double walls can be found on our homepage www.bgw-bohr.de**
**under Quality -> BGW double wall transport anchors**
**Load capacity tables - LGA type approval**

**Notes on the article number of the BGW transport anchors for double walls**

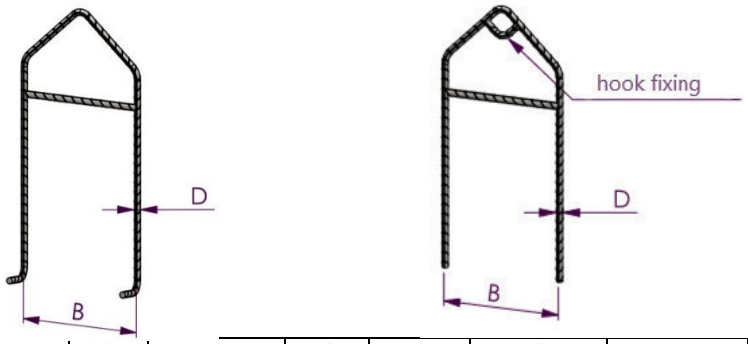


| 1 | 2 | 3 | 4 | 5 | 6 | 7 | 8 | 9 |
|---|---|---|---|---|---|---|---|---|
| article group | type | load t | Ø BST D | width B/mm | cutting mm | BST ripped=1 | hook straight=0 bent=1 | hook fixing without=0 with=1 |
| 4 | 2 | 4,5 | 14 | 150 | 1200 | 1 | 0 | 0 |

- to 1: indicates the article group (always the same).
- to 2: indicates the anchor type.
- to 3: indicates the load level of the transport anchor.
- to 4: indicates the Ø of the rebar for the transport anchor.
- to 5: indicates the outer width of the transport anchor.
- to 6: indicates the length of the blank for the hanger of the lifting anchor. From an external width of 250 mm, the blank is 1500 mm. If D> = 16 mm, the blank is also 1500 mm. Otherwise, the blank has a length of 1200 mm.
- to 7: indicates that the high ductile rebar steel is ribbed.
- to 8: indicates whether the anchor is straight or bent.
- to 9: indicates whether the anchor is with or without hook fixation.

**With the help of this table you can indicate the corresponding article number with your inquiry or order.**

**type 2: with welded cross strut – between the legs**

The cross strut prevents when raising the wall, the contraction of the legs, as well as the tearing out of the legs of the concrete.

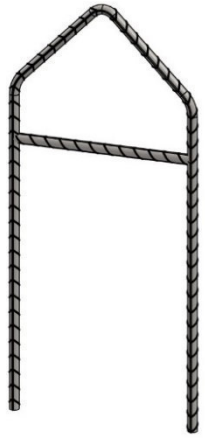

| art.-no. | load t | Ø BST | width B mm | cutting mm | weight kg | PU | price |
|---|---|---|---|---|---|---|---|
| 42321213012010000000 | 3,2 | 12 | 130 | 1200 | 1,2 | 500 | **3,26 €** |
| 42321215012010000000 | 3,2 | 12 | 150 | 1200 | 1,2 | 500 | **3,38 €** |
| 42321218012010000000 | 3,2 | 12 | 180 | 1200 | 1,2 | 500 | **3,42 €** |
| 42321220012010000000 | 3,2 | 12 | 200 | 1200 | 1,2 | 500 | **3,52 €** |
| 42321222012010000000 | 3,2 | 12 | 220 | 1200 | 1,2 | 500 | **3,64 €** |
| 42321224012010000000 | 3,2 | 12 | 240 | 1200 | 1,3 | 500 | **3,76 €** |
| 42321226015010000000 | 3,2 | 12 | 260 | 1500 | 1,5 | 250 | **4,12 €** |
| 42321228015010000000 | 3,2 | 12 | 280 | 1500 | 1,6 | 250 | **4,32 €** |
| 42321230015010000000 | 3,2 | 12 | 300 | 1500 | 1,6 | 250 | **4,40 €** |
| 42451411012010000000 | 4,5 | 14 | 110 | 1200 | 1,6 | 500 | **4,28 €** |
| 42451412012010000000 | 4,5 | 14 | 120 | 1200 | 1,6 | 500 | **4,32 €** |
| 42451412512010000000 | 4,5 | 14 | 125 | 1200 | 1,6 | 500 | **4,34 €** |
| 42451413012010000000 | 4,5 | 14 | 130 | 1200 | 1,6 | 500 | **4,38 €** |
| 42451414012010000000 | 4,5 | 14 | 140 | 1200 | 1,6 | 500 | **4,54 €** |
| 42451415012010000000 | 4,5 | 14 | 150 | 1200 | 1,6 | 500 | **4,62 €** |
| 42451415512010000000 | 4,5 | 14 | 155 | 1200 | 1,6 | 500 | **4,66 €** |
| 42451416012010000000 | 4,5 | 14 | 160 | 1200 | 1,6 | 500 | **4,72 €** |
| 42451417012010000000 | 4,5 | 14 | 170 | 1200 | 1,6 | 500 | **4,78 €** |
| 42451419012010000000 | 4,5 | 14 | 190 | 1200 | 1,6 | 500 | **4,84 €** |
| 42451420012010000000 | 4,5 | 14 | 200 | 1200 | 1,7 | 500 | **4,88 €** |
| 42451421012010000000 | 4,5 | 14 | 210 | 1200 | 1,7 | 500 | **4,96 €** |
| 42451422012010000000 | 4,5 | 14 | 220 | 1200 | 1,7 | 500 | **5,02 €** |
| 42451423012010000000 | 4,5 | 14 | 230 | 1200 | 1,7 | 500 | **5,10 €** |
| 42451425015010000000 | 4,5 | 14 | 250 | 1500 | 2,1 | 250 | **5,12 €** |
| 42451426015010000000 | 4,5 | 14 | 260 | 1500 | 2,1 | 250 | **5,16 €** |
| 42451427015010000000 | 4,5 | 14 | 270 | 1500 | 2,1 | 250 | **5,24 €** |
| 42451428015010000000 | 4,5 | 14 | 280 | 1500 | 2,1 | 200 | **5,30 €** |
| 42451431015010000000 | 4,5 | 14 | 310 | 1500 | 2,2 | 200 | **5,40 €** |
| 42451432015010000000 | 4,5 | 14 | 320 | 1500 | 2,2 | 200 | **5,48 €** |
| 42451435015010000000 | 4,5 | 14 | 350 | 1500 | 2,2 | 200 | **5,62 €** |
| 42451438015010000000 | 4,5 | 14 | 380 | 1500 | 2,2 | 200 | **5,70 €** |
| 42581615015010000000 | 5,8 | 16 | 150 | 1500 | 2,6 | 250 | **5,54 €** |
| 42581618015010000000 | 5,8 | 16 | 180 | 1500 | 2,6 | 250 | **5,80 €** |
| 42581621015010000000 | 5,8 | 16 | 210 | 1500 | 2,6 | 250 | **6,00 €** |
| 42581623015010000000 | 5,8 | 16 | 230 | 1500 | 2,7 | 250 | **6,08 €** |
| 42581625015010000000 | 5,8 | 16 | 250 | 1500 | 2,7 | 250 | **6,28 €** |
| 42581627015010000000 | 5,8 | 16 | 270 | 1500 | 2,7 | 250 | **6,40 €** |
| 42581628015010000000 | 5,8 | 16 | 280 | 1500 | 2,8 | 250 | **6,54 €** |
| 42581629015010000000 | 5,8 | 16 | 290 | 1500 | 2,8 | 250 | **6,62 €** |
| 42581631015010000000 | 5,8 | 16 | 310 | 1500 | 2,8 | 250 | **6,72 €** |
| 42882031015010000000 | 8,8 | 20 | 310 | 1500 | 4,4 | 125 | **8,94 €** |
| 42882032015010000000 | 8,8 | 20 | 320 | 1500 | 4,4 | 125 | **9,10 €** |
| 42882033015010000000 | 8,8 | 20 | 330 | 1500 | 4,4 | 125 | **9,28 €** |

**type 3: with welded cross strut – above the legs**

The protruding cross strut Ø 20 mm takes over the largest load of the wall and thus prevents a contraction and tearing out of the legs of the concrete.

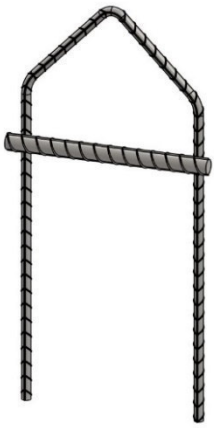

| art.-no. | load t | Ø BST | width B mm | cutting mm | weight kg | PU | price |
|---|---|---|---|---|---|---|---|
| 43321213012010000000 | 3,2 | 12 | 130 | 1200 | 1,4 | 500 | **3,76 €** |
| 43321218012010000000 | 3,2 | 12 | 180 | 1200 | 1,6 | 500 | **4,06 €** |
| 43321226015010000000 | 3,2 | 12 | 260 | 1500 | 2,0 | 250 | **4,90 €** |
| 43451413012010000000 | 4,5 | 14 | 130 | 1200 | 1,8 | 250 | **5,00 €** |
| 43451414012010000000 | 4,5 | 14 | 140 | 1200 | 1,8 | 250 | **5,06 €** |
| 43451415012010000000 | 4,5 | 14 | 150 | 1200 | 1,9 | 250 | **5,16 €** |
| 43451417012010000000 | 4,5 | 14 | 170 | 1200 | 1,9 | 250 | **5,22 €** |
| 43451419012010000000 | 4,5 | 14 | 190 | 1200 | 2,0 | 250 | **5,30 €** |
| 43451421012010000000 | 4,5 | 14 | 210 | 1200 | 2,0 | 250 | **5,50 €** |
| 43451423012010000000 | 4,5 | 14 | 230 | 1200 | 2,1 | 250 | **5,56 €** |
| 43451424012010000000 | 4,5 | 14 | 240 | 1200 | 2,1 | 250 | **5,60 €** |
| 43451428015010000000 | 4,5 | 14 | 280 | 1500 | 2,6 | 200 | **5,72 €** |
| 43451431015010000000 | 4,5 | 14 | 310 | 1500 | 2,6 | 200 | **5,90 €** |
| 43581614015010000000 | 5,8 | 16 | 140 | 1500 | 2,8 | 250 | **5,82 €** |
| 43581615015010000000 | 5,8 | 16 | 150 | 1500 | 2,8 | 250 | **5,88 €** |
| 43581617515010000000 | 5,8 | 16 | 175 | 1500 | 2,9 | 250 | **6,06 €** |
| 43581619015010000000 | 5,8 | 16 | 190 | 1500 | 2,9 | 250 | **6,12 €** |
| 43581621015010000000 | 5,8 | 16 | 210 | 1500 | 2,9 | 250 | **6,18 €** |
| 43581623015010000000 | 5,8 | 16 | 230 | 1500 | 3,0 | 250 | **6,24 €** |
| 43581628015010000000 | 5,8 | 16 | 280 | 1500 | 3,1 | 200 | **6,38 €** |
| 43581629015010000000 | 5,8 | 16 | 290 | 1500 | 3,1 | 200 | **6,56 €** |
| 43581631015010000000 | 5,8 | 16 | 310 | 1500 | 3,2 | 200 | **6,66 €** |
| 43882016015010000000 | 8,8 | 20 | 160 | 1500 | 4,1 | 250 | **8,32 €** |
| 43882019015010000000 | 8,8 | 20 | 190 | 1500 | 4,2 | 250 | **8,60 €** |
| 43882031015010000000 | 8,8 | 20 | 310 | 1500 | 4,5 | 125 | **9,18 €** |
| 43882032015010000000 | 8,8 | 20 | 320 | 1500 | 4,5 | 125 | **9,34 €** |
| 43882033015010000000 | 8,8 | 20 | 330 | 1500 | 4,6 | 125 | **9,52 €** |

**If you need other outside widths or special execution, we can of course produce these according to your wishes.**

# BGW-Transportanchor Fili 10

04/18(06/18)

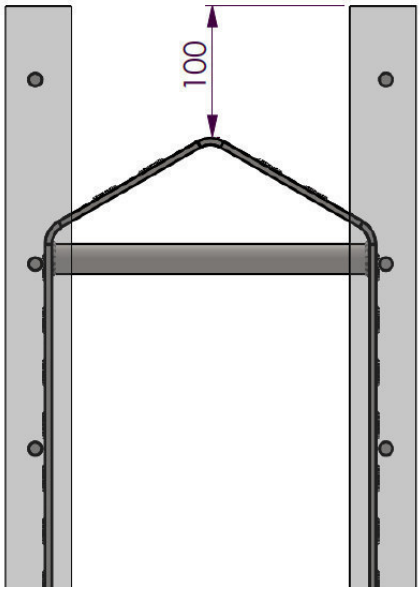


This type of transport anchor type "Fili 10" is made of a flat reinforcement steel and was specially developed for components that have a low concrete cover. If you replace a transport anchor made of round reinforcement with a "Fili 10" transport anchor, you gain up to 10 millimeters of concrete cover.
This allows more safety when transporting precast concrete parts. Alternatively, with sufficient concrete coverage, the wall formwork can be made narrower by up to 10 millimeters. This leads to a considerable saving of concrete and weight.

**advantages:**

- higher concrete coverage with walls of equal width
- More safety when transporting precast concrete parts

The transport anchor "Fili 10" is made of ribbed flat steel reinforcement 35 x 5 mm S235JR (Q235B). This steel has very good welding properties. The anchoring ribs have been hot rolled on the outside of the transport anchor into the steel. Between the legs of the load bar has been attached as a stiffening a steel pipe. As a result, the legs of the lifting anchor do not pull together under load.

**BGW- double wall transport anchor made of flat steel reinforcement**

| Art. No. | load | axial[1] | slanting[2] 60° slanting[2] 45° | cross[3] | wall width mm | anchor width mm | anchor heigth mm | weight kg | pack-unit | price |
|---|---|---|---|---|---|---|---|---|---|---|
| 10140 | 4,5t | 4,5t | 3,0t 2,0t | 2,25t | 200 | 140 | 400 | 1,266 | 500 | 3,20 € |
| 10180 | 4,5t | 4,5t | 3,0t 2,0t | 2,25t | 240 | 180 | 400 | 1,358 | 500 | 3,40 € |
| 10240 | 4,5t | 4,5t | 3,0t 2,0t | 2,25t | 300 | 240 | 400 | 1,510 | 500 | 3,80 € |
| 10300 | 4,5t | 4,5t | 3,0t 2,0t | 2,25t | 360 | 300 | 400 | 1,663 | 500 | 4,20 € |

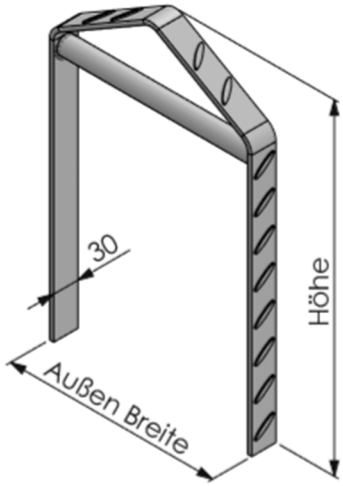


**BGW- double wall transport anchor made of flat steel reinforcement with hook clamping protection**

| Art. No. | load | axial[1] | slanting[2] 60° slanting[2] 45° | cross[3] | wall width mm | anchor width mm | anchor heigth mm | weight kg | pack-unit | price |
|---|---|---|---|---|---|---|---|---|---|---|
| 101401 | 4,5t | 4,5t | 3,0t 2,0t | 2,25t | 200 | 140 | 412 | 1,390 | 500 | 4,20 € |
| 101801 | 4,5t | 4,5t | 3,0t 2,0t | 2,25t | 240 | 180 | 412 | 1,508 | 500 | 4,40 € |
| 102401 | 4,5t | 4,5t | 3,0t 2,0t | 2,25t | 300 | 240 | 412 | 1.690 | 500 | 4,80 € |
| 103001 | 4,5t | 4,5t | 3,0t 2,0t | 2,25t | 360 | 300 | 412 | 1,883 | 500 | 5,20 € |

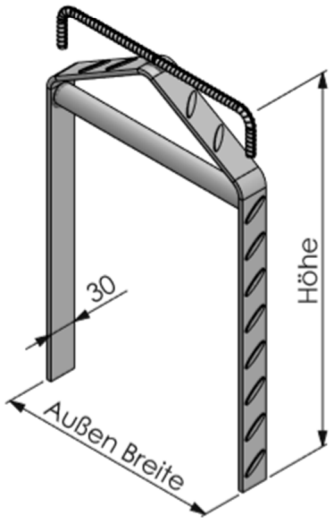


[1]**axial**: max. load when lifting vertically.
[2]**slanting**: Two anchors carry together a building component at the specified angel of inclination the load in the table is given for a carrying anchor
[3]**Quer**: If recumbent component should be erecting.
The loading information always refers to an anchor.

*Other versions on request.*

# BGW-Transportanchor Fili 10

04/18(06/18)

The concrete strength must be at least C 25/30 and the concrete cover over the anchor legs must be at least 10 mm. The transport anchor is installed as in BGW double wall transport anchors with round reinforcement. The transport anchor should be so wide that it rests against the reinforcement inside of the wall shells. The upper part of the transport anchor should be 100 mm below the upper edge of the wall. So that the anchor can not overturn with loose reinforcement, this is attached above with an auxiliary crossbar on lattice girders.

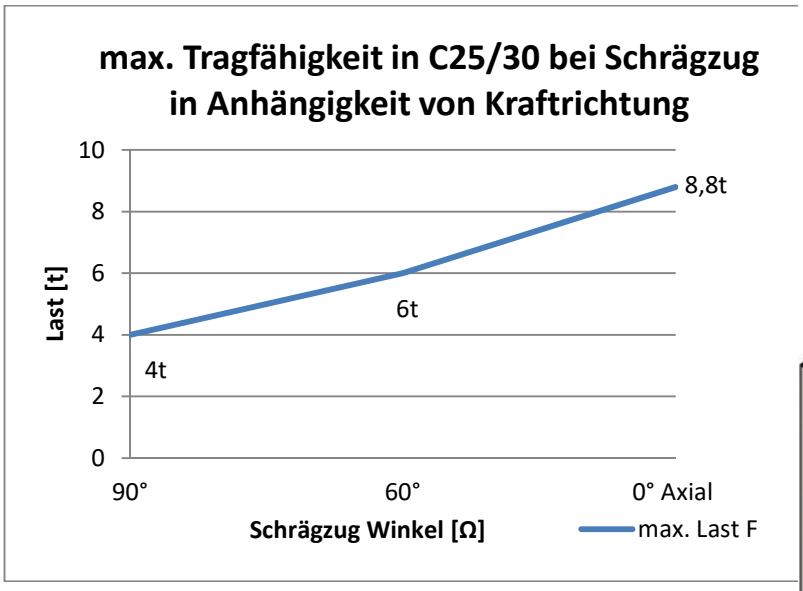


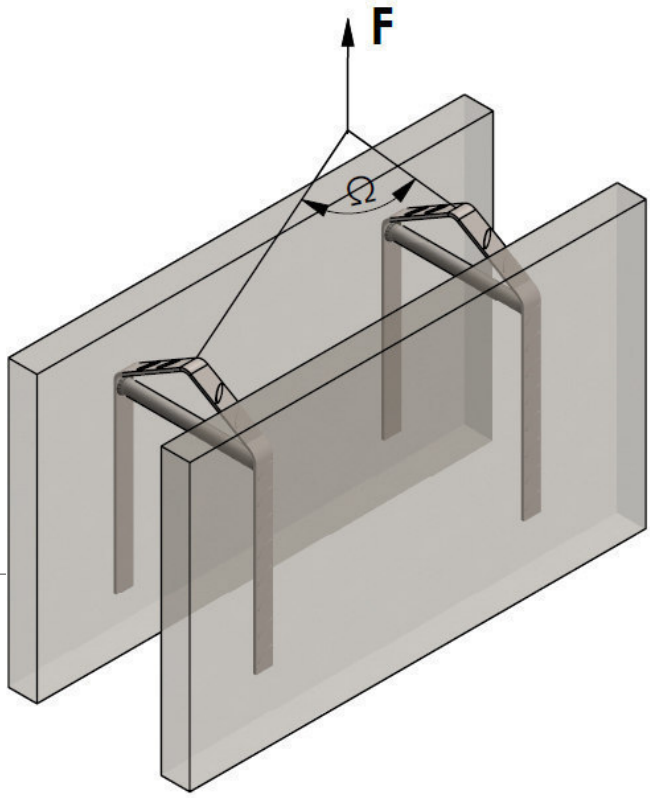


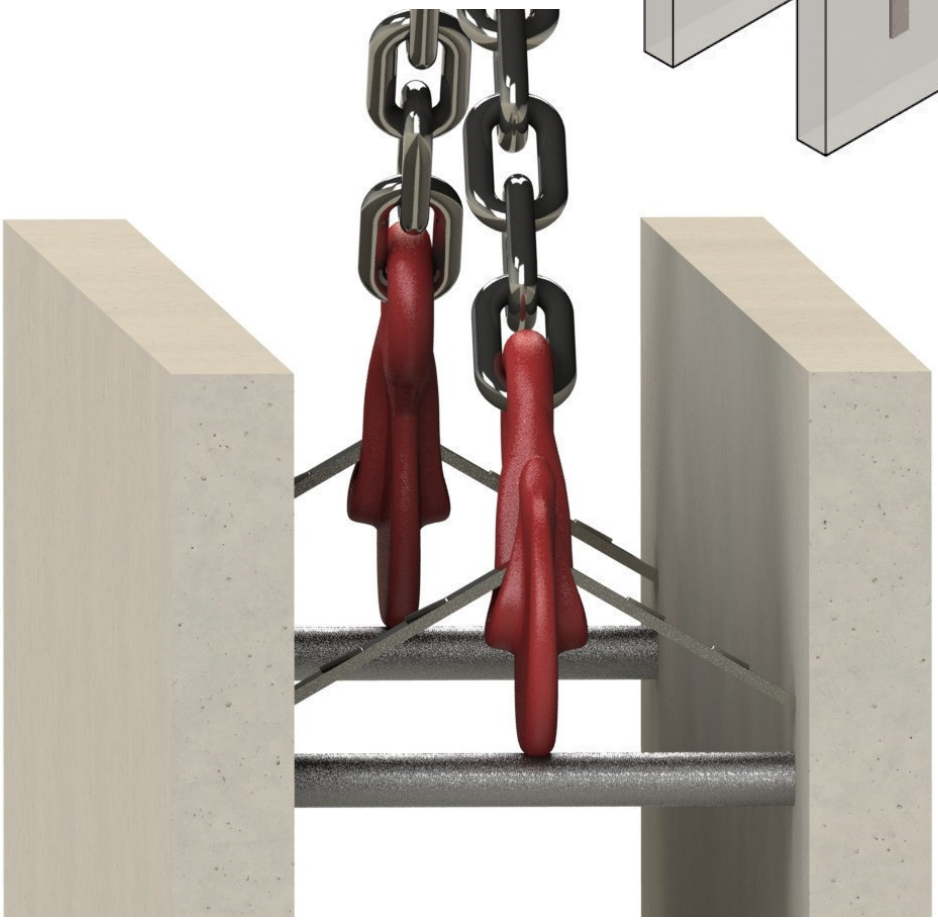

# BGW-transport anchors Fili-14 – for double walls

08/19(08/19)

## - Where safety, price, DIN conformity and quick installation are the priorities -

The BGW-transport-anchor Fili-14 is used to transport double walls. This filigree anchor consists of a bracket made of approved steel DIN 488 and the cross bar (push rod) made of thick-walled steel tube.
In general, the crossbar has been welded into the bracket so far. However, welded transport anchors have an increased risk of breakage at the welds due to possible material embrittlement. According to the state of the art, the tie bar and push rod no longer need to be welded together to direct the tensile forces at the anchor into the anchor legs. For these reasons, our Fili-14 deliberately dispenses with the welding of the cross bar.

When first connecting the wall in the precast plant, it is recommended to grind a BGW coupling belt through the transport anchor in order to connect or disconnect the components without ladder. The danger of a worker dropping off the ladder when anchoring the component and getting injured is very high. There is the requirement of the professional association for a "ladderless construction site"

The push rod is formed on both end faces so that it is stuck to the anchor legs. It is placed directly on the bends of the anchoring legs, so that a deformation of the stop triangle is prevented.

The anchor can be installed diagonally in the wall. The fact that the Fili-14 is made of steel according to DIN 488 and has no disturbing hooks and shafts, an anchor width can be used for several wall widths. It is important that the concrete cover of the legs of at least 10 mm is guaranteed. The gradation can be made in increments of 20 mm. Example: The anchor with the width of 150 mm can be installed for the anchor of width 140 mm and 130 mm. The storage costs can be significantly reduced.

## Fili-14 with Rebar, Ø 12 and Ø 14

Load Capacity Charts/Type calculation BGW Double Wall Transport Anker Ø12 and Ø14 (PDF-file)

Fili-14 **with rebar, load 3,7 t**

| Art.-Nr. | anchor width b [mm] | weight [kg] | price €/ piece |
|---|---|---|---|
| 1412120 | 120 | 0,87 | 2,15 |
| 1412130 | 130 | 0,89 | 2,20 |
| 1412140 | 140 | 0,91 | 2,25 |
| 1412150 | 150 | 0,93 | 2,29 |
| 1412160 | 160 | 0,95 | 2,35 |
| 1412170 | 170 | 0,97 | 2,40 |
| 1412180 | 180 | 1,00 | 2,47 |
| 1412190 | 190 | 1,03 | 2,55 |
| 1412200 | 200 | 1,06 | 2,62 |
| 1412210 | 210 | 1,09 | 2,70 |
| 1412220 | 220 | 1,12 | 2,77 |
| 1412230 | 230 | 1,15 | 2,84 |
| 1412240 | 240 | 1,17 | 2,89 |
| 1412250 | 250 | 1,20 | 2,97 |
| 1412280 | 280 | 1,28 | 3,17 |
| 1412300 | 300 | 1,34 | 3,31 |

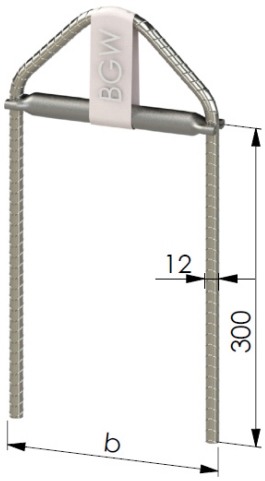


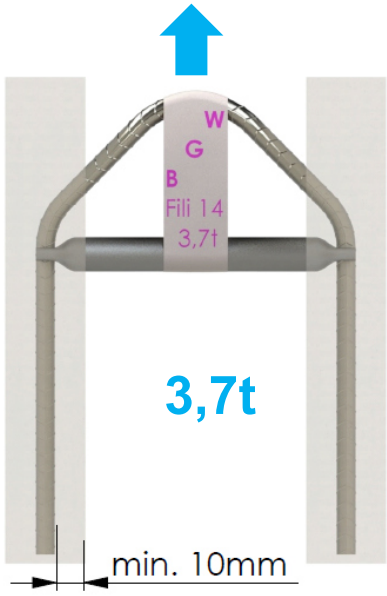


Fili-14 **with rebar, load 4,5t**

| Art.-Nr. | anchor width b [mm] | weight [kg] | price €/ piece |
|---|---|---|---|
| 1414120 | 120 | 1,12 | 2,86 |
| 1414130 | 130 | 1,15 | 2,96 |
| 1414140 | 140 | 1,17 | 3,06 |
| 1414150 | 150 | 1,19 | 3,16 |
| 1414160 | 160 | 1,22 | 3,26 |
| 1414170 | 170 | 1,24 | 3,38 |
| 1414180 | 180 | 1,27 | 3,52 |
| 1414190 | 190 | 1,31 | 3,70 |
| 1414200 | 200 | 1,34 | 3,84 |
| 1414210 | 210 | 1,37 | 3,98 |
| 1414220 | 220 | 1,41 | 4,16 |
| 1414230 | 230 | 1,44 | 4,32 |
| 1414240 | 240 | 1,47 | 4,48 |
| 1414250 | 250 | 1,50 | 4,60 |
| 1414280 | 280 | 1,60 | 5,02 |
| 1414300 | 300 | 1,66 | 5,26 |

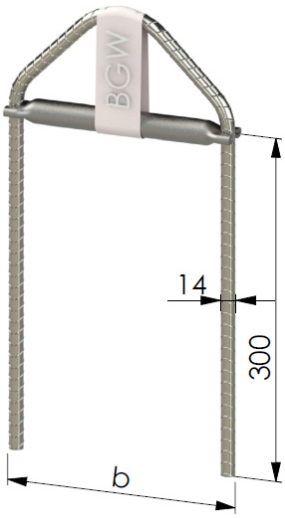


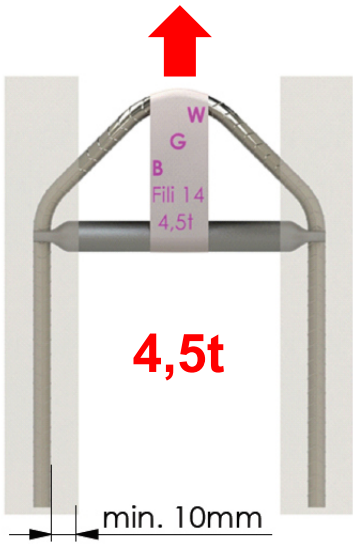

# Fili-14 with rebar, Ø 16 und Ø 20

08/19(08/19)

TLoad Capacity charts/Type calculation BGW Double Wall Transport Anker Ø 16 and Ø 20 (PDF-file)

Fili-14 with **rebar, load 5,8t**

| art.-no. | anchor width b [mm] | price €/ piece |
|---|---|---|
| 1416120 | 120 | on demand |
| 1416130 | 130 | |
| 1416140 | 140 | |
| 1416150 | 150 | |
| 1416160 | 160 | |
| 1416170 | 170 | |
| 1416180 | 180 | |
| 1416190 | 190 | |
| 1416200 | 200 | |
| 1416210 | 210 | |
| 1416220 | 220 | |
| 1416230 | 230 | |
| 1416240 | 240 | |
| 1416250 | 250 | |
| 1416280 | 280 | |
| 1416300 | 300 | |

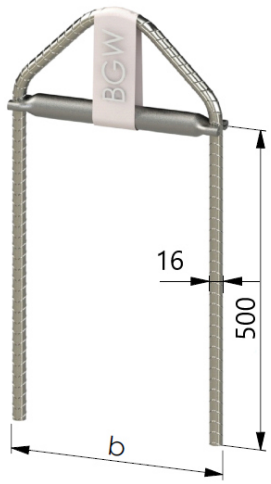


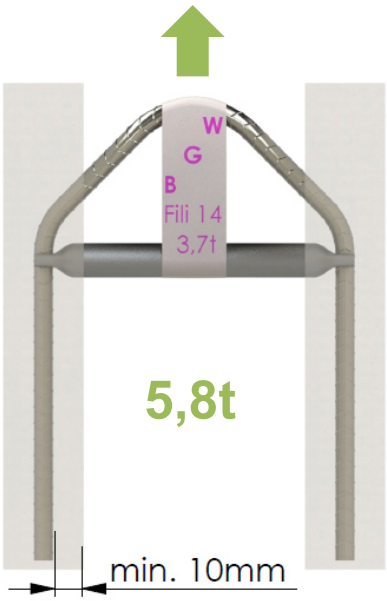


Fili-14 with **rebar, load 8,5t**

| art.-no. | anchor width b [mm] | price €/ piece |
|---|---|---|
| 1420120 | 120 | on demand |
| 1420130 | 130 | |
| 1420140 | 140 | |
| 1420150 | 150 | |
| 1420160 | 160 | |
| 1420170 | 170 | |
| 1420180 | 180 | |
| 1420190 | 190 | |
| 1420200 | 200 | |
| 1420210 | 210 | |
| 1420220 | 220 | |
| 1420230 | 230 | |
| 1420240 | 240 | |
| 1420250 | 250 | |
| 1420280 | 280 | |
| 1420300 | 300 | |

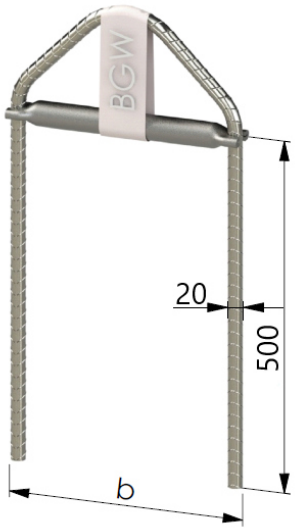


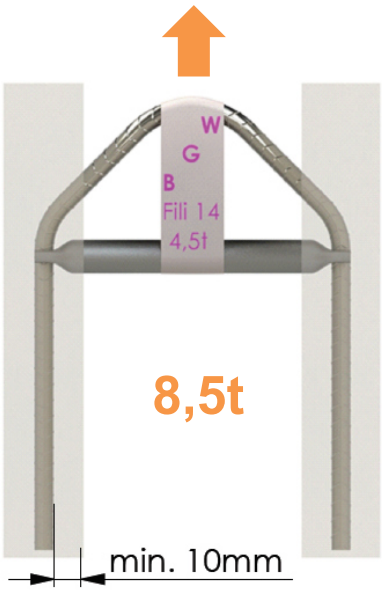

# *BGW*-transport anchors Fili-14 – for double walls

08/19(08/19)

In accordance with BGR 106, the Fili-14 is permanently marked with the manufacturer, anchor type and load level in the stop triangle as required by the safety rule. After concreting the Fili-14 into the double wall, this identification band can be pierced by the chain hook.

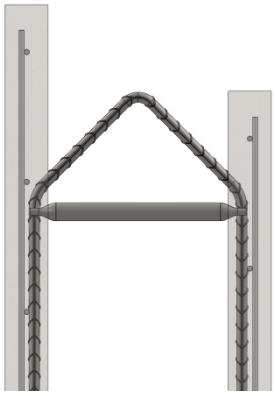

The installation of the transport anchor Fili-14 is very fast, very easy and there is no installation direction to consider. For the expert installation is self-explanatory.

The top edge of the transport anchor should be at the same height or slightly deeper than the top of the lower wall shell. The lifting anchors should be fastened to the reinforcing steel behind the reinforcement mat on the inside of the walls. The anchors should always be installed 90 ° to the wall level.

In the case of loose reinforcement, first adjust the anchor and then attach the double-wall anchor to it with a cross-beam that rests on the lattice girders to the right and left of the double-wall transport anchor.

The BGW transport anchor Fili-14 with rebar Ø 12 is designed for an axial load of 3,7 tonnes. the Ø 14 for 4,5 tonnes, the Ø 16 for 5,8 tonnes and the Ø 20 for 8,5 tonnes.

This is at a concrete strength C25 / 30 and a concrete overlap of the two legs of min. 10 mm tested. Maximum load per anchor during erection or diagonal pull is 1,8 tonnes with rebar Ø 12 and 2,2 tonnes with rebar Ø 14, with 2,9 tonnes with rebar Ø 16 and with 4,2 tonnes with rebar Ø 20. Crane hoist load factor must not exceed 1.1.

The stop for the transport hook is located in the bending radius of the bracket. The bending radius is adapted for crane hooks of up to 5 tons, so that the hook sits non-slip and the load is distributed evenly over the bracket.

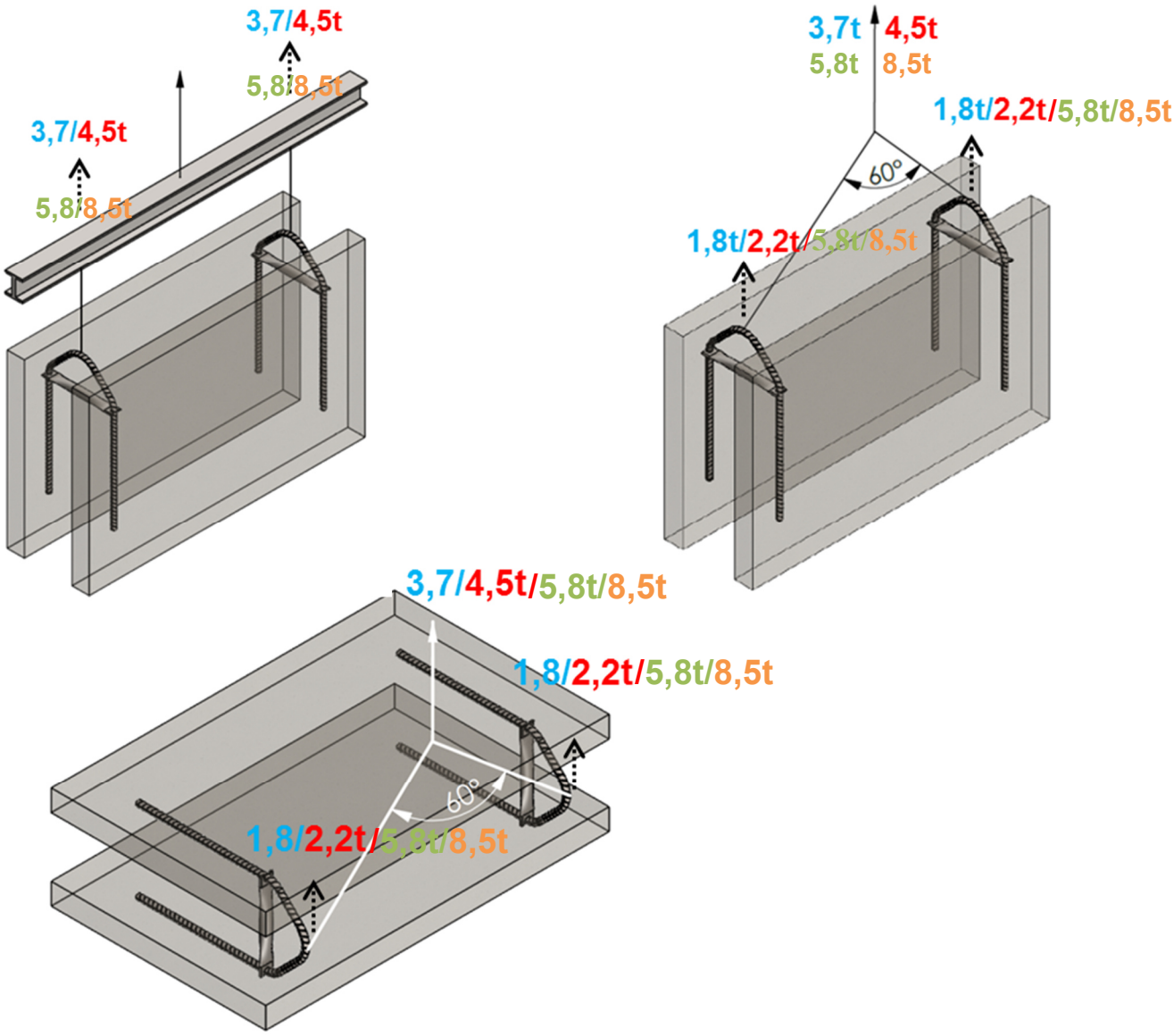

# BGW-Erection reinforcement for BGW-double wall transport anchors

05/19(05/19)

The erection reinforcement is part of the BGW double wall transport anchor system.

Especially when erecting and when transporting double walls, the BGW-Erection reinforcement is recommended to avoid cracks. The function of the erection reinforcement consists in the enlargement of the area between the filigree anchor and concrete. As a result, the weight of the precast concrete part is distributed over a larger area and thus prevents cracking in the loading zone.

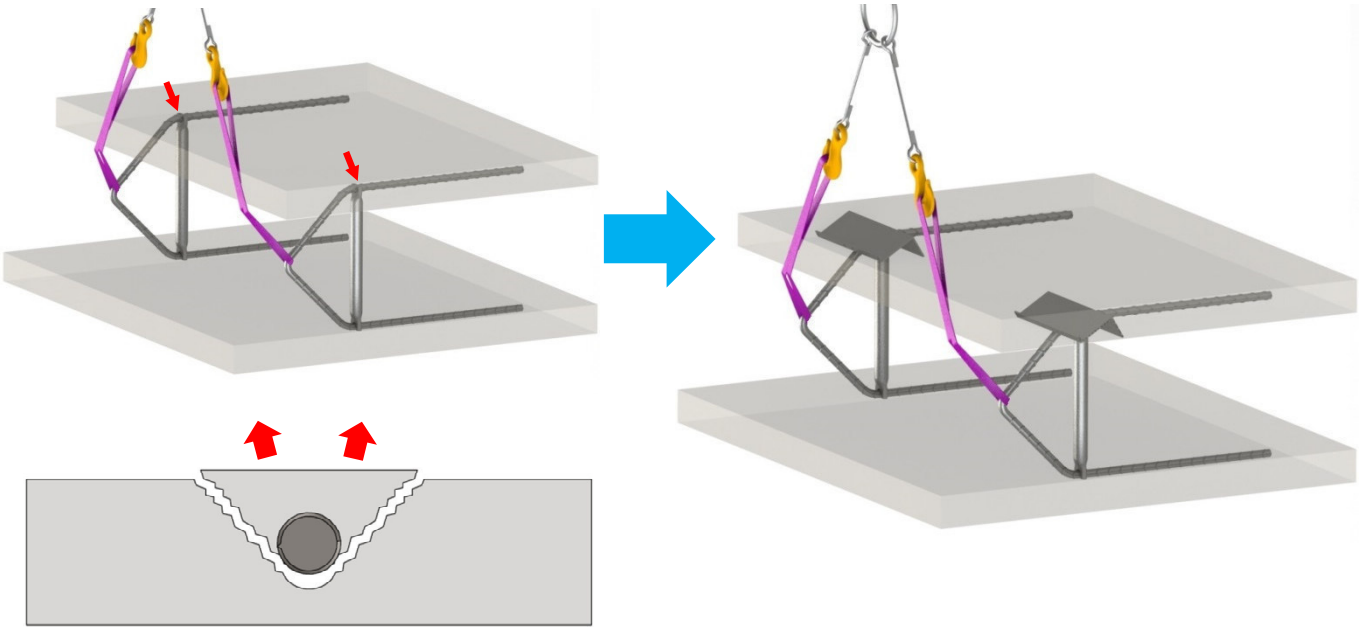

The erection reinforcement is usually a double edged, rigid sheet metal part, which is pushed onto an anchor rod of the double wall anchor and attached to the stop triangle. The erection reinforcement can also be retrofitted before concreting during assembly of the double wall anchor. It is installed in the wall shell, which is at the top during transport.

With concrete strength of the load-bearing wall shell C 25/30 and concrete shell thickness approx. 60 mm, the concrete fracture or first cracks only occur at min. 2500 kg per double wall anchor.

**BGW-Erection Reinforcement**

| art.-no. | l mm | price €/piece |
|---|---|---|
| 4646 | 200 | 1,95 |

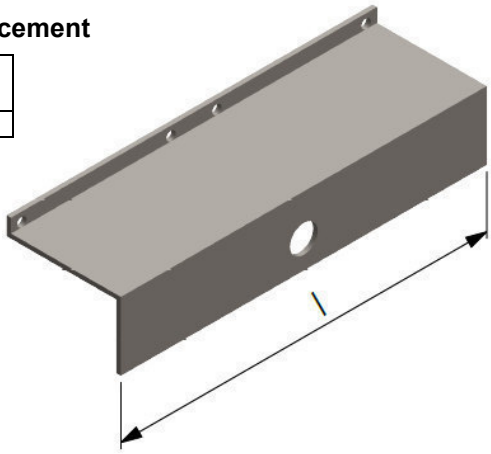

**Cable ties**
**(for attaching BGW erection reinforcement to the anchor)**

| art.-no. | price € / 100pcs |
|---|---|
| 56484 | 2,60 |

# BGW-Erection reinforcement for BGW-double wall transport anchors

05/19(05/19)

**Installation instructions for maximum possible load capacity:**
To do this, place the double-wall anchor between the lattice girders. In addition, a reinforcing bar (approx. Ø 12 mm) is fastened directly to the erection reinforcement along the gutter of the erection reinforcement. In this case, this reinforcing bar must overlap the adjacent lattice girders or be attached to these lattice girders. The erection reinforcement must be positionally secured, so that it can not slip when compacting the concrete. The erection reinforcement is installed in the first concrete shell. The concrete of this shell is usually at least a day older and firmer than the subsequent wall shell.

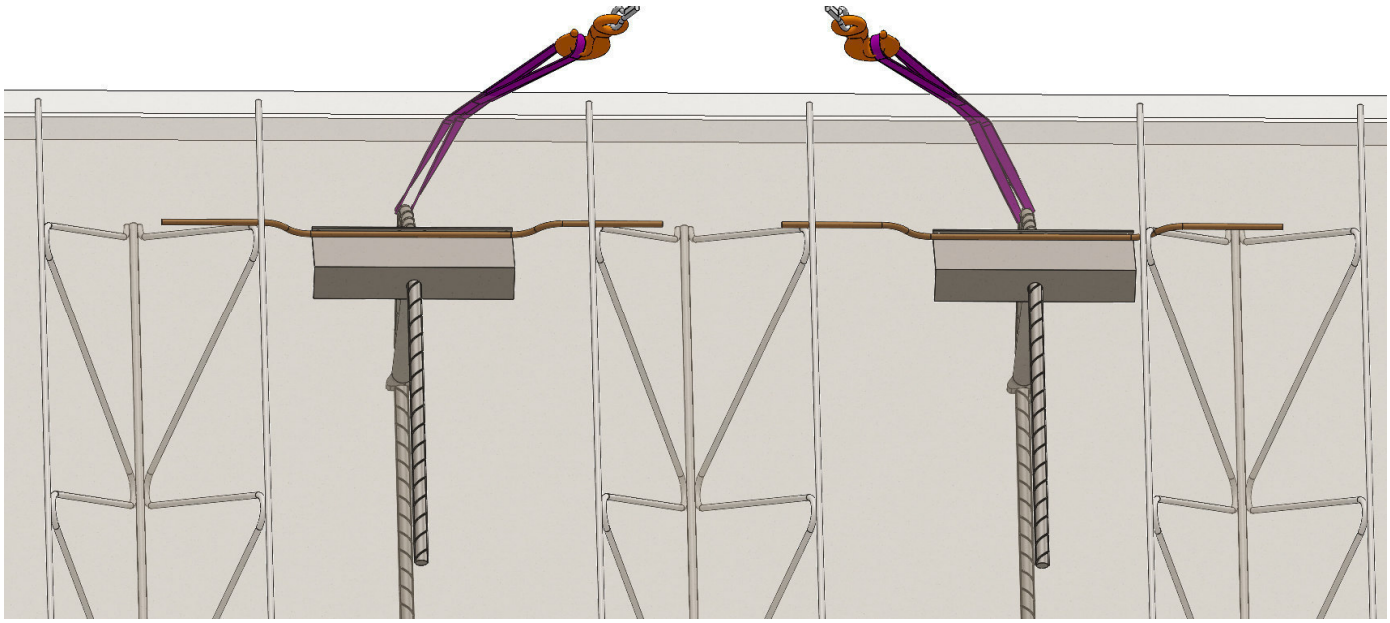

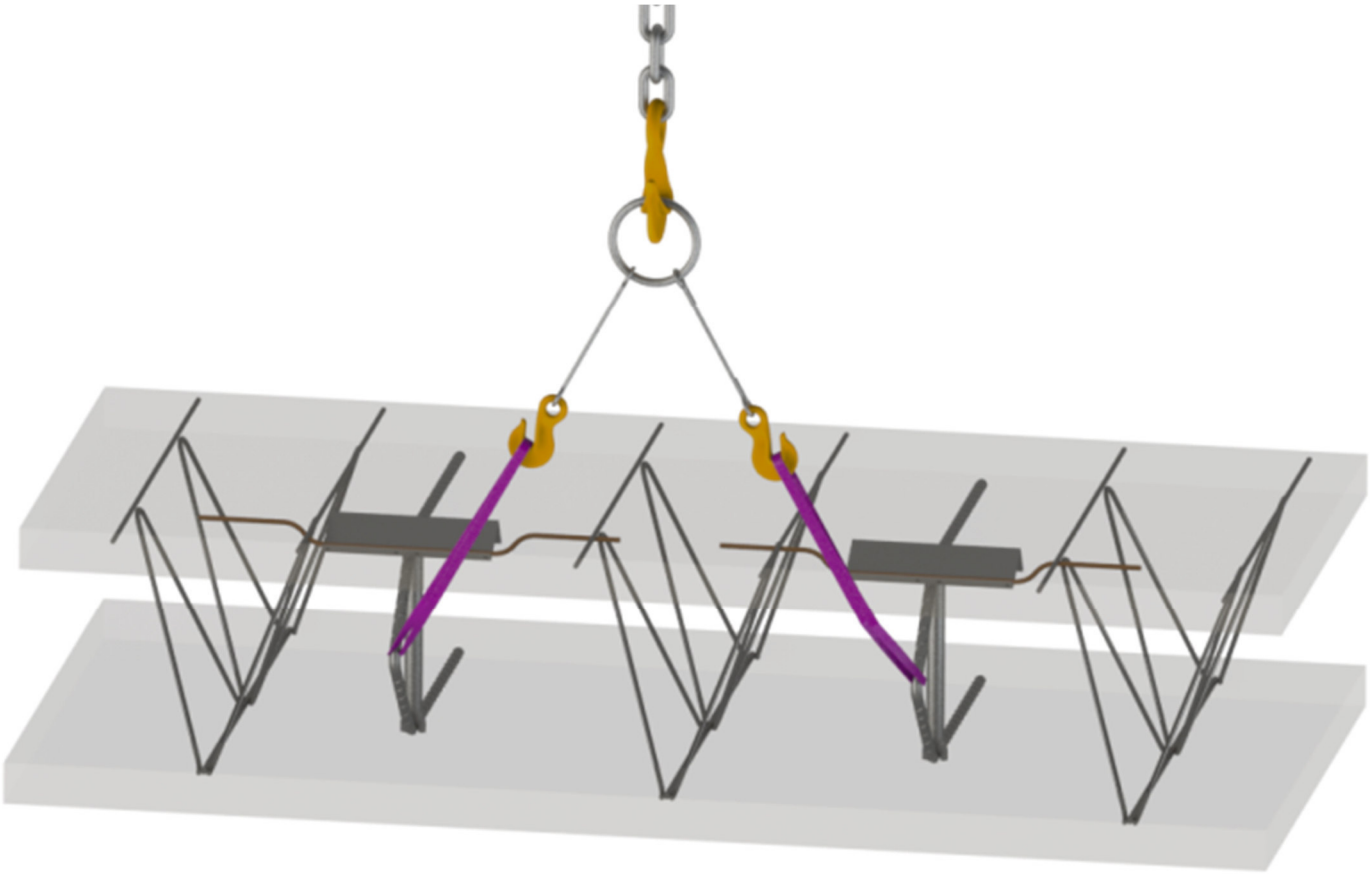

# BGW-coupling tape - the mounting aid for walls - mount without climbing

03/19(03/19)

***Advantages***

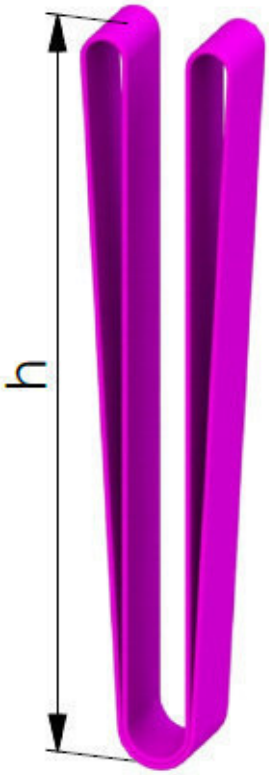


- **No ladder needed => Lower risk of accident when hanging up and loosening**
- **Faster attachment and detachment of wall elements**

The BGW-coupling tape is an important component of the BGW-double wall lifting anchor system. In order to avoid rising on walls when hitching the lifting device, the BGW-coupling tape is used.

The BGW coupling tape can be pulled into the still lying wall through the lifting anchor in the precast plant. The BGW coupling tape must be able to move freely in the stop area of the double wall anchor so that it can be freely pulled out from the stop area of the anchor after a strand of the coupling band has been unhooked from the stop band. In the movie you can see how it works in practice: *https://youtu.be/fm6zY27VV9k*

The BGW coupling tape is approx. 6m long. In the case of a standing 3 m high wall, the impactor, at a height of approx. 1.5 m, standing on the ground, can unhook the tape from the hook of the transport hanger.

The requirement of the professional association for a ladderless construction site, we are thus a bit further. Ladders or other aids are thus not needed as often.

So that the sharp-edged concrete does not damage the coupling tape, the double wall would have to chamfer in the area of the transport anchor when concreting the double wall.

The coupling tape had to be replaced by an undamaged one as soon as it is damaged.

**BGW-Coupling tape for double walls**

| art.-no. | load t | h mm | price €/piece |
|---|---|---|---|
| 4640 | 4,8t | 1500 | 7,00 |

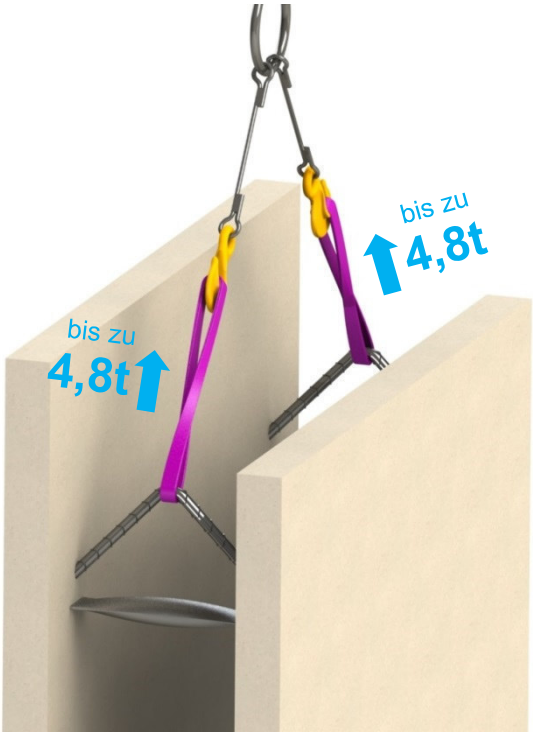

# *BGW*-Assembly Package or „Everything for assembly“ 05/08(07/15)

When assembling precast concrete parts many different additional articles are needed. For example, underlays for level control, angle for connecting the individual elements, impact anchors, screws and matching dowels. In order to have all parts in sufficient quantity ready, a high logistical effort is required. The risk that unnecessarily costs are generated by building delays due to lack of small parts is still high.
We offer you to deliver customized packages for you on fixed terms.

**Identification of the BGW assembly package:**
- individual composition according to your specifications
- labeled containers with customer logo (e.g., plastic bucket)
- Delivery together with promotional materials (folding rules, brochures, instructions for use)
- On-time delivery at predefined quantities
- short-term delivery through pre-production

**Your advantages:**
- **Costing:** Manageable and transparent costs
- **Customer service:** Additional aids can be supplied at any time, for a fixed price
- **Working time savings:** Individual parts do not have to be procured separately
- **Logistics** is greatly simplified, the required materials are reliably available at the construction site
- **Safety:** Installation of the walls through predefined operations, suitable mounting material and clear instructions for use
- **Warranty:** clear definition through assembly instructions

**Possible contents assembly package:**
- Mounting bracket
- Washers of plastic
- Impact anchor
- Screws with matching plastic dowels
- Folding rule
- assembly Instructions
- Innovation: with stone screws instead of dowels

We will gladly make you an offer about your individual assembly packages

**Content (example 1): Assembly Package for prefabricated walls Art.-No. 5094**

| art.-no. | description | dimension | amount |
|---|---|---|---|
| 5087 | mounting plate | 70x70x2 | 30 |
| 5090 | mounting plate | 70x70x5 | 20 |
| 5091 | mounting plate | 70x70x10 | 30 |
| 5093 | mounting plate | 70x70x20 | 35 |
| 56374 | impact anchor, galvanized | M12 x 110 | 30 |
| 56307 | screws DIN 571 | 8,0 x40 | 50 |
| 56273 | screws DIN 571 | 12,0 x 70 | 30 |
| 56308 | washer DIN 9021, galvanized. | 8,4 x 24 | 50 |
| 56309 | washer DIN 9021, galvanized. | 13,0 x 40 | 60 |
| 0518 200x260 | assembly corner bracket | 200x260x25x1 | 25 |

**Content (example 2): Assembly Package for prefabricated walls Art.-No. 5094-5**

| art.-no. | description | dimension | amount |
|---|---|---|---|
| 5087 | mounting plate | 70x70x2 | 40 |
| 5088 | mounting plate | 70x70x3 | 40 |
| 5090 | mounting plate | 70x70x5 | 40 |
| 5091 | mounting plate | 70x70x10 | 40 |
| 5093 | mounting plate | 70x70x20 | 40 |
| 561781 | screws DIN 571 | 12,0x80 | 60 |
| 56309 | washer DIN 9021 galvanized | 13x40 | 60 |
| 562826 | plastic dowels | 14x70 | 55 |
| 0518 230x190 | assemly corner bracket | 230x190x50x5 | 8 |
| 562828 | folding rule | | 1 |
| | assembly instructions | | 1 |
| 562830 | PVC bucket 18L | | 1 |
| 562829 | carpenter pencil | | 1 |

**You receive prices on request!**

# BGW-Installation Angle & Installation Package

04/11(12/06)

## BGW-Installation Angle

for concrete components (e.g. Element walls, light wells)

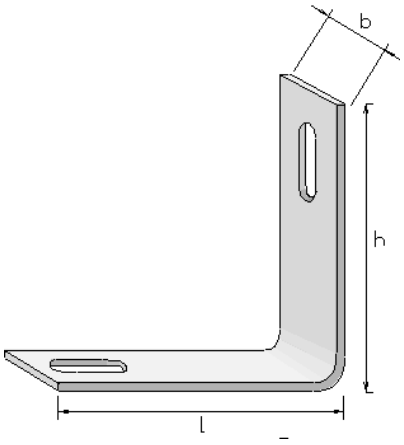


Excerpt from our product range:

| art.-no. | l mm | h mm | b mm | material d mm | price €/piece |
|---|---|---|---|---|---|
| 0518 70x70x7 | 70 | 70 | 35 | 7 | on demand |
| 0518 100x100x8 | 100 | 100 | 60 | 8 | |
| 0518 150x75x8M | 150 | 75 | 60 | 8 | |
| 0518 150x70x10 | 150 | 100 | 70 | 10 | |
| 0518 180x100x1 | 180 | 100 | 100 | 10 | |
| 0518 200x50x5 | 200 | 200 | 50 | 5 | |
| 0518 230x190 | 230 | 190 | 50 | 5 | |
| 0518 300x300x5 | 300 | 300 | 60 | 5 | |
| 0518 465x60x5 | 465 | 465 | 60 | 5 | |

Each with different hole pattern (such as slot) available.
We will gladly make you an offer for your specific application

## BGW-Installation Package

For the fast installation of concrete components on building site

Content (example): Installation Packag for precast walls art.-no. 5094

| art.-no. | description | dimension | number |
|---|---|---|---|
| 5087 | mounting panel | 70x70x2 | 30 |
| 5090 | mounting panel | 70x70x5 | 20 |
| 5091 | mounting panel | 70x70x10 | 30 |
| 5093 | mounting panel | 70x70x20 | 35 |
| 56374 | wedge anchor, galvanized | M12 x 110 | 30 |
| 56307 | screws DIN 571 | 8,0 x40 | 50 |
| 56273 | screws DIN 571 | 12,0 x 70 | 30 |
| 56308 | Enclosure plate DIN 9021, galv. | 8,4 x 24 | 50 |
| 56309 | Enclosure plate DIN 9021, galv. | 13,0 x 40 | 60 |
| 0518 200x260 | Installation angle | 200x260x25x1 | 25 |

**Prices on demand!**

## BGW-Installation Plates made of plastic

| art.-no. | l mm | b mm | h mm | price €/1000 piece |
|---|---|---|---|---|
| 5087 | 70 | 70 | 2 | 39,38 |
| 5088 | 70 | 70 | 3 | 40,60 |
| 5090 | 70 | 70 | 5 | 64,40 |
| 5089 | 70 | 70 | 8 | 125,00 |
| 5091 | 70 | 70 | 10 | 140,00 |
| 5092 | 70 | 70 | 15 | 369,00 |
| 5093 | 70 | 70 | 20 | 388,40 |

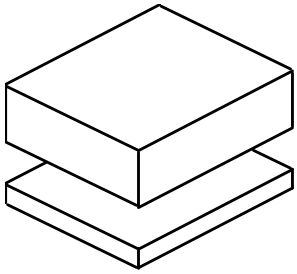

# Order form *BGW*-Installation angles

04/11(12/06)

## The installation angles is in different hole pattern available:

Please mark the requested hole pattern

| | Hole pattern |
|---|---|
| ☐ | with round-holes |
| ☐ | with round-holes and elongated hole |
| ☐ | with elongated hole |
| ☐ | with elongated holes slanting |
| ☐ | with elongated holes slanting and round-holes |

## Available in the following versions (material):

Please mark as expected

| | Versions | Our offer for you - price/€ |
|---|---|---|
| ☐ | inflected out of flat steel | |
| ☐ | made of warm rolled angled steel/sharp-edged | |
| | | |
| ☐ | bare | |
| ☐ | galvanized | |
| ☐ | hot dipped galvanized | |
| ☐ | stainless steel | |

Please register your requested quantities

| art.-no. | l mm | h mm | b mm | material d mm | pieces |
|---|---|---|---|---|---|
| 0518 70x70x7 | 70 | 70 | 35 | 7 | |
| 0518 100x100x8 | 100 | 100 | 60 | 8 | |
| 0518 150x75 x8M | 150 | 75 | 60 | 8 | |
| 0518 150x70x10 | 150 | 100 | 70 | 10 | |
| 0518 180x100x1 | 180 | 100 | 100 | 10 | |
| 0518 200x50x5 | 200 | 200 | 50 | 5 | |
| 0518 230x190 | 230 | 190 | 50 | 5 | |
| 0518 300x300x5 | 300 | 300 | 60 | 5 | |
| 0518 465x60x5 | 465 | 465 | 60 | 5 | |

Round-holes

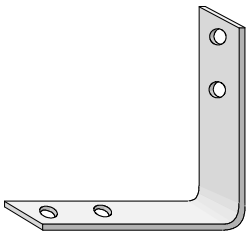

Elongated holes

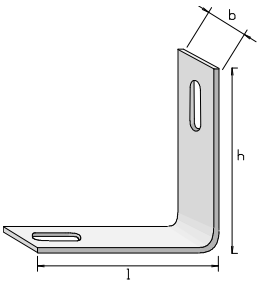


Elongated holes/slanting

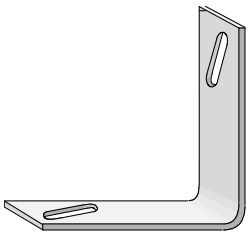

Elongated holes slanting and round-holes

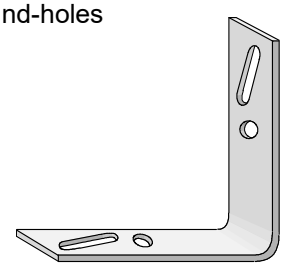

Round-holes and elongated holes

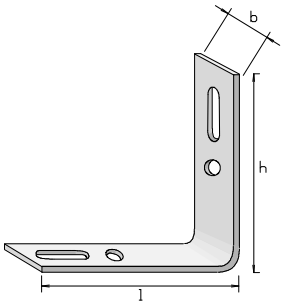


## The amount of the holes are variable; Depends on your special application

## Examples:

| Angle: | hole pattern: | number of holes: |
|---|---|---|
| 0518 70x70x35/7 | round-holes | 2 on each side |
| 0518 70x70x35/7 | elongated holes | 1 on each side |
| 0518 70x70x35/7 | round-holes/ elongated holes | 1 round-hole on each side and 1 elongated hole on each side |
| 0518 230x190x50/5 | round-holes | 3 on each side |
| 0518 230x190x50/5 | elongated holes slanting/round-holes | 1 elongated hole on each side and 2 round-holes on each side |

*Please send us a drawing with your request/order!.*

**BGW**-Bohr GmbH – 97854 Steinfeld – Tel. 09359/90950 – Fax. 09359/1640 – www.bgw-bohr.de

# BGW-Installation Angle

04/18(04/18)

The BGW-installation angle are used in steel construction. They are ideal for fixing steel profiles in hall construction or in other steel constructions. BGW-installation angle are available in galvanized steel and in different versions..

| Art.-No. | material | l [mm] | h [mm] | s [mm] | f [mm] | m [mm] | weight kg/piece | price €/piece |
|---|---|---|---|---|---|---|---|---|
| 0518 142x6x70 | steel | 142 | 70 | 6 | 31 | 28 | 0,40 | 1,38 |
| 0518 142x6x70-V | galvanized steel | 142 | 70 | 6 | 31 | 28 | 0,42 | 2,96 |

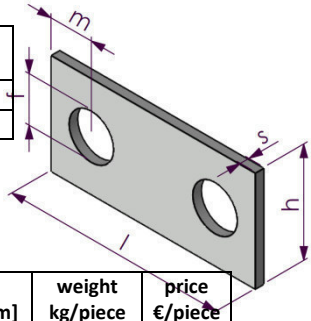


| Art.-No. | material | l [mm] | b [mm] | h [mm] | s [mm] | f [mm] | k [mm] | m [mm] | z [mm] | weight kg/piece | price €/piece |
|---|---|---|---|---|---|---|---|---|---|---|---|
| 0518 190x60x60 | steel | 190 | 60 | 60 | 6 | 11 | 30 | 15 | 95 | 0,99 | 3,96 |
| 0518 190x60x60-V | galvanized steel | 190 | 60 | 60 | 6 | 11 | 30 | 15 | 95 | 1,06 | 8,07 |

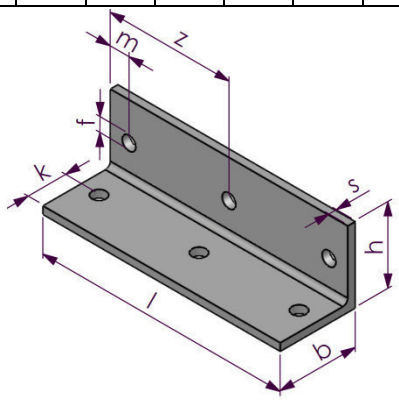


| Art.-No. | material | l [mm] | b [mm] | h [mm] | s [mm] | f [mm] | m [mm] | e [mm] | k [mm] | z [mm] | y [mm] | w [mm] | v [mm] | weight kg/piece | price €/piece |
|---|---|---|---|---|---|---|---|---|---|---|---|---|---|---|---|
| 0518 255x60x100 | steel | 255 | 60 | 100 | 4 | 10 | 25 | 50 | 14 | 26 | 28 | 65 | 30 | 0,97 | 3,88 |
| 0518 255x60x100-V | galvanized steel | 255 | 60 | 100 | 4 | 10 | 25 | 50 | 14 | 26 | 28 | 65 | 30 | 1,04 | 7,92 |

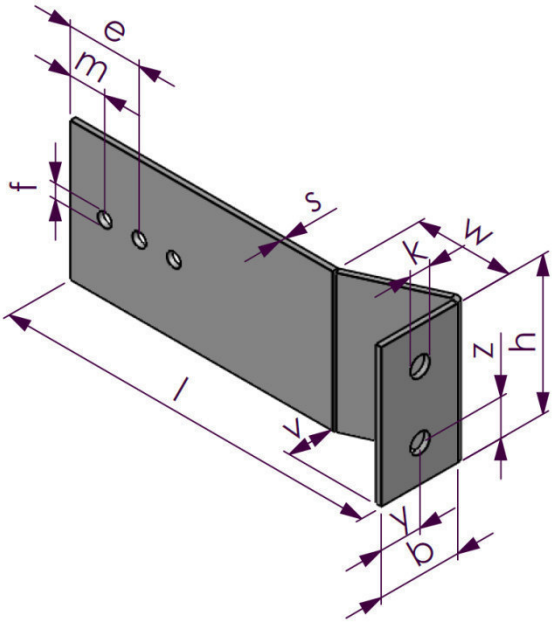


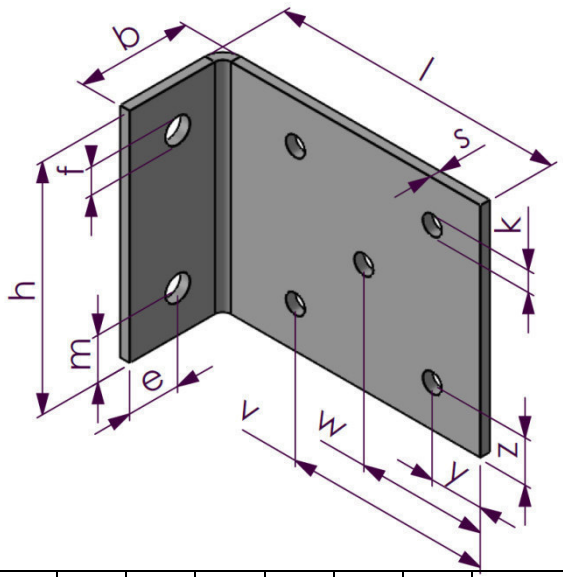


| Art.-No. | material | l [mm] | b [mm] | h [mm] | s [mm] | f [mm] | m [mm] | e [mm] | k [mm] | z [mm] | y [mm] | w [mm] | v [mm] | weight kg/piece | price €/piece |
|---|---|---|---|---|---|---|---|---|---|---|---|---|---|---|---|
| 0518 195x75x160 | steel | 195 | 75 | 160 | 7 | 18 | 30 | 35 | 14 | 30 | 35 | 85 | 135 | 2,19 | 8,77 |
| 0518 195x75x160-V | galvanized steel | 195 | 75 | 160 | 7 | 18 | 30 | 35 | 14 | 30 | 35 | 85 | 135 | 2,34 | 17,82 |

**Other dimensions on request!**

# *BGW*-Assembly bracket with surface toothing



Components are screwed together with a BGW assembly bracket. Due to the toothing between the assembly bracket and shim, it is impossible to move screwed-on components. Even with partially loosened screws, the components remain fixed by the teeth. A good application example for BGW assembly bracket is the light shaft for the basement windows. Light wells mounted with BGW assembly brackets are positionally safe against buoyancy during floods or earth mass movements.

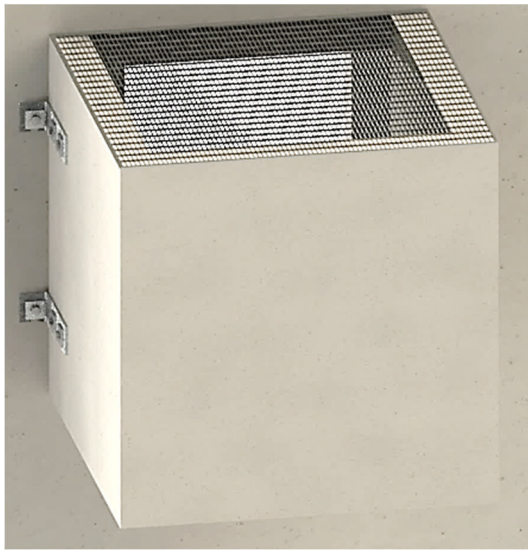

***Advantages:***

- Position security despite flood, landslide or earthquake.
- Secure attachment by tooth profile even with partially loosened screws

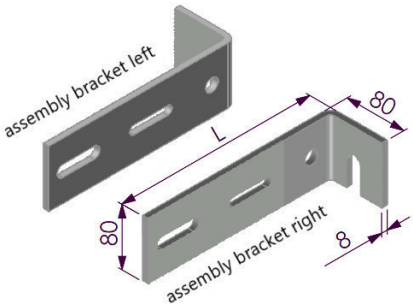


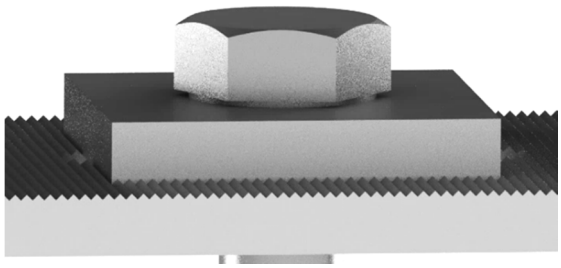

**BGW-Assembly bracket made of S235JR galvanized (left/right)**

| art.-no. | model | color surface | length l mm | weight kg | price €/piece |
|---|---|---|---|---|---|
| 0518 265x80x8ZVL | left | gold | 265 | 1,4 | 6,50 |
| 0518 265x80x8ZVR | right | blue | 265 | 1,4 | 6,50 |

**BGW-Assembly-bracket made of stainless steel V2A/V4A (left/right)**

| art.-no. | model | color surface | length l mm | material | weight kg | price €/piece |
|---|---|---|---|---|---|---|
| 0518 265x80x8ZLE | left | gold | 265 | V2A | 1,4 | 26,50 |
| 0518 265x80x8ZRE | right | blue | 265 | V2A | 1,4 | 26,50 |
| 0518 265x80x8ZLEE | left | gold | 265 | V4A | 1,4 | 33,50 |
| 0518 265x80x8ZREE | right | blue | 265 | V4A | 1,4 | 33,50 |

**BGW-Toothed washer**

| art.-no. | material | Dimensions lxbxh mm | price €/piece |
|---|---|---|---|
| 7291 | S235, verzinkt | 40x40x6 | 1,98 |
| 7299 | V4A | 40x40x6 | 3,01 |

**Screw M16**

| art.-no. | material | length l mm | package unit. piece | price €/piece |
|---|---|---|---|---|
| 562434 | S235, verzinkt | 35 | 100 | 0,28 |
| 562434EE | V4A | 35 | 100 | 3,70 |

# BGW-Concrete Loops made of wire rope (galvanized)/PP

***BGW***-Concrete Loops made of wire rope are transport anchors for precast concrete parts whose stop side is no longer visible after installation. Therefore, they are particularly suitable for prefabricated foundations, beams and retaining walls.

**Load capacity tables and usage instructions:**
http://bgw-bohr.de/pdf_Betonschlaufen_Tragfähigkeitstabelle_Verwendungsanleitung.pdf
http://bgw-bohr.de/pdf_Betonschlaufen_Fotodokumentationen.pdf

**EU Declaration of Conformity:**
http://bgw-bohr.de/pdf/CE_Zeichen/EG-Konf_BGW-Betonschlaufe_alle_Laststufen.pdf

***Please note:***
Concrete loops should be protected against crushing, corrosion and klinking during storage and processing.
Cable clamp made of aluminium – on request also made of steel.

**BGW-Concrete Loops made of wire rope, galvanized**

| art.-no. | load t | rope ∅ mm | h mm | b mm | wide strapping [mm] | color data ring | pack.-unit piece | weight kg/piece | price €/piece |
|---|---|---|---|---|---|---|---|---|---|
| 4500 | 0,80 | 6 | 200 | 85 | 65 | pure white | 100 | 0,07 | 1,70 |
| 4502 | 1,20 | 7 | 225 | 90 | 70 | fire red | 100 | 0,10 | 2,00 |
| 4504 | 1,60 | 8 | 245 | 100 | 70 | light pink | 50 | 0,15 | 2,10 |
| 4506 | 2,00 | 9 | 265 | 125 | 95 | white green | 50 | 0,21 | 2,80 |
| 4508 | 2,50 | 10 | 285 | 140 | 115 | anthracite gray | 20 | 0,28 | 2,90 |
| 4510 | 4,00 | 12 | 345 | 160 | 130 | emerald | 10 | 0,46 | 4,10 |
| 4512 | 5,20 | 14 | 390 | 180 | 160 | curry yellow | 1 | 0,70 | 5,90 |
| 4514 | 6,30 | 16 | 415 | 210 | 180 | light blue | 1 | 1,02 | 8,20 |
| 4516 | 8,00 | 18 | 460 | 220 | 170 | silver grey | 1 | 1,60 | 11,30 |
| 4519 | 10,00 | 20 | 510 | 250 | 180 | bordeaux violet | 1 | 2,10 | 16,90 |
| 4520 | 12,50 | 22 | 570 | 280 | 225 | sulfur yellow | 1 | 3,12 | 20,80 |
| 4522 | 16,00 | 24 | 640 | 295 | 240 | blue purple | 1 | 4,71 | 31,20 |
| 4524 | 20,00 | 28 | 715 | 320 | 260 | yellow grey | 1 | 5,28 | 46,00 |
| 4526 | 25,00 | 30 | 800 | 380 | 300 | clay brown | 1 | 6,10 | 57,60 |

| art.-no. | load t | rope ∅ mm | h mm | pack.-unit piece | weight kg/piece | price €/piece |
|---|---|---|---|---|---|---|
| 4527 | 28,00 | 32 | 765 | 1 | 7,70 | 89,10 |
| 4523 | 32,00 | 32 | 770 | 1 | 10,68 | 90,40 |
| 4525 | 37,00 | 36 | 950 | 1 | 13,44 | 118,80 |
| 4528 | 42,00 | 40 | 1000 | 1 | 12,00 | 195,20 |
| 4521 | 47,00 | 44 | 1100 | 1 | 16,42 | 211,00 |
| 4529 | 52,00 | 44 | 1200 | 1 | 17,44 | 251,00 |
| 4531 | 57,00 | 44 | 1350 | 1 | 25,00 | 266,00 |
| 4543 | 65,00 | 48 | 1430 | 1 | 30,00 | 315,00 |
| 4544 | 75,00 | 50 | 1530 | 1 | 46,00 | 389,00 |
| 4545 | 85,00 | 52 | 1680 | 1 | 55,00 | 417,00 |
| 4549 | 99,00 | 56 | 1800 | 1 | 68,00 | 511,00 |

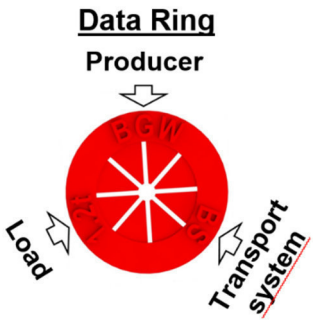


## *BGW*-Concrete Loops made of polypropylene

***BGW***-Concrete Loops made of polypropylene are nearly similar to ***BGW***-Concrete Loops made of wire rope. Concrete loops made of PP are easier to handle due to their elasticity and low weight.
Cable clamp made of aluminium – on request also made of steel.

| art.-nr. | load t | rope ∅ mm | h mm | color data ring | pack.-unit piece | weight kg/piece | price €/piece |
|---|---|---|---|---|---|---|---|
| 4601 | 0,150 | 6 | 200 | telemagenta | 100 | 0,013 | 0,66 |
| 4600 | 0,250 | 8 | 220 | telemagenta | 100 | 0,030 | 0,77 |
| 4602 | 0,360 | 10 | 235 | telemagenta | 50 | 0,049 | 0,92 |
| 4603 | 0,500 | 12 | 255 | pastel orange | 50 | 0,082 | 1,28 |
| 4604 | 0,875 | 14 | 280 | telemagenta | 20 | 0,119 | 1,71 |
| 4605 | 1,000 | 16 | 330 | - | 10 | 0,202 | 2,15 |

# *BGW* – Weldable Concrete Loop

The BGW-Weldable Concrete Loop is a normal type tested BGW-Concrete Loop, as known as BS-anchor.

The difference between a normal concrete loop or rather a BS-anchor, is that this concrete loop is equipped with extra hangers. On these hangers can the concrete loop be welded on or tied on the armor iron – overarm too -. The concrete loop is now with the armor iron safe, inseparable and secure connected.

The concrete loop can be delivered with a soft wire, to tie it or with a hard armor iron to weld.

In the standard equipment is the concrete loop delivered with the hard armor iron on the cable clip, we offer the lateral fixations by request.

We recommend especially the lateral fixations by so-called “open concrete loops” also to be welded on the armorion.

| art.-no. | load t | rope ∅ mm | h mm | wire length L mm | wire-Ø mm | wide strapping/ mm | width b/mm | PU Stück | weight kg/pcs. | price €/pcs |
|---|---|---|---|---|---|---|---|---|---|---|
| 4500S | 0,80 | 6 | 200 | 100 | 2 | 65 | 85 | 100 | 0,07 | 2,20 |
| 4502S | 1,20 | 7 | 225 | 100 | 2 | 70 | 90 | 100 | 0,10 | 2,60 |
| 4504S | 1,60 | 8 | 245 | 200 | 2 | 70 | 100 | 50 | 0,15 | 2,75 |
| 4506S | 2,00 | 9 | 265 | 200 | 2 | 95 | 125 | 50 | 0,21 | 3,65 |
| 4508S | 2,50 | 10 | 285 | 200 | 2 | 115 | 140 | 20 | 0,28 | 3,80 |
| 4510S | 4,00 | 12 | 345 | 200 | 2 | 130 | 160 | 10 | 0,46 | 5,35 |
| 4512S | 5,20 | 14 | 390 | 200 | 2 | 160 | 180 | 1 | 0,70 | 7,70 |
| 4514S | 6,30 | 16 | 415 | 250 | 2 | 180 | 210 | 1 | 1,02 | 10,65 |
| 4516S | 8,00 | 18 | 460 | 250 | 3 | 170 | 220 | 1 | 1,60 | 14,70 |
| 4519S | 10,00 | 20 | 510 | 250 | 3 | 180 | 250 | 1 | 2,10 | 22,00 |
| 4520S | 12,50 | 22 | 570 | 300 | 3 | 225 | 280 | 1 | 3,12 | 27,00 |
| 4522S | 16,00 | 26 | 640 | 300 | 3 | 240 | 295 | 1 | 4,71 | 40,60 |
| 4524S | 20,00 | 28 | 715 | 300 | 3 | 260 | 320 | 1 | 5,28 | 59,80 |
| 4526S | 25,00 | 30 | 800 | 300 | 3 | 300 | 380 | 1 | 6,10 | 74,80 |

# BGW-Bent Cast-in Loops and Pocket former



## *BGW*-wire cable Bent Cast-in Loops, galvanized

***BGW*-Bent Cast-in Loops** are suitable for installation in thin concrete elements such as ceilings, floor slabs, angle brackets and light wells. For load introduction into the structure, the angle loop is additionally reinforced as required. The eyelet for receiving the crane hook can either protrude from the plate, o be recessed in a recess.
Variant: BGW angle loops with rebending angle for erecting concrete elements.

**Installation and usage instructions:**
*http://www.bgw-bohr.de/pdf/EinbauanleitungBGW-Winkelschlaufen.pdf*

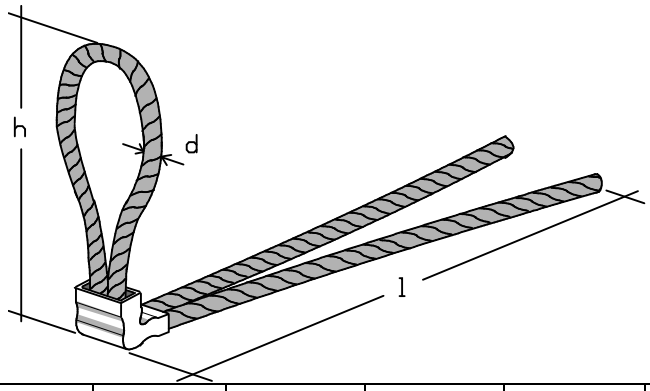


| art.-no. | load t | loop h mm | legs l mm | wire cable d mm | weight kg/piece | price piece |
|---|---|---|---|---|---|---|
| 4556 | 0,8 | 180 | 300 | 6 | 0,17 | 1,90 € |
| 4557 | 1,2 | 180 | 400 | 7 | 0,25 | 2,10 € |
| 4547 | 1,6 | 150 | 330 | 8 | 0,31 | 2,60 € |
| 4558 | 2,0 | 180 | 500 | 9 | 0,45 | 2,90 € |
| 4551 | 2,5 | 150 | 330 | 10 | 0,43 | 2,80 € |
| 4546 | 2,5 | 180 | 350 | 10 | 0,49 | 2,90 € |
| 4553 | 4,0 | 160 | 380 | 12 | 0,67 | 4,30 € |
| 4548 | 4,0 | 230 | 380 | 12 | 0,70 | 4,50 € |
| 4550 | 5,2 | 230 | 380 | 14 | 0,71 | 6,00 € |
| 4552 | 8,0 | 230 | 600 | 18 | 1,96 | 12,00 € |

## *BGW*-Cast-in Loop with special closure

Can be pulled straight

| art.-no. | load t | loop h mm | legs l mm | wire cable d mm | weight kg/piece | price piece |
|---|---|---|---|---|---|---|
| 4550v | 5,2 t | 230 | 490 | 14 | 0,96 | 6,40 € |

## *BGW*-Pocket former for Cast-in Loop

The ***BGW*-Pocket former** is used to fix Cast-in Loops

| art.-no. | load t | ∅ wire cable mm | price piece |
|---|---|---|---|
| 1699 | 1,6 | 8 | 25,00 € |
| 1697 | 2,0 | 9 | 25,00 € |
| 1691 | 2,5 | 10 | 25,00 € |
| 1693 | 4,0 | 12 | 31,00 € |
| 1694 | 6,3 | 16 | 65,00 € |
| 1696 | 10,0 | 20 | 71,00 € |

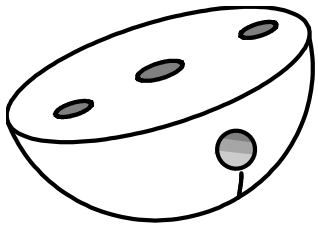

# *BGW*-Spread Anchor

09/18(09/18)

***BGW*-Spread anchor** is a responsible transport anchor system. It is delivered ready to install and is suitable for installation in all precast concrete parts. Before using the spread anchor, check the conditions given in the installation instructions. The BGW two-hole anchor is technically equal to the spread anchor, but must be completed with reinforcement according to the installation instructions.

**additional charge:**
**galvanized: 1,20 € / KG**
**hot dipped galvanized 1,50 € / KG**
**stainless steel V4A and special lengths on request.**

| art.-no. | load (t) | length l mm | flat steel b + c mm | Ø-hole d mm | pack.-unit piece | weight KG / piece. | price (blank) | price (galvanized) | Preis (hot dipped-galvanized) |
|---|---|---|---|---|---|---|---|---|---|
| TPA-S-0,7-11 | 0,7 | 110 | 30 x 5 | 14 x 20 | 150 | 0,12 | 1,21 | 1,52 | 1,60 |
| TPA-S-1,4-11 | 1,4 | 110 | 30 x 6 | | | 0,13 | 1,37 | 1,70 | 1,79 |
| TPA-S-1,4-16 | 1,4 | 160 | | | | 0,20 | 1,58 | 2,09 | 2,22 |
| TPA-S-2,0-13 | 2,0 | 130 | 30 x 8 | | 100 | 0,21 | 1,76 | 2,30 | 2,43 |
| TPA-S-2,0-16 | 2,0 | 160 | | | | 0,27 | 1,98 | 2,67 | 2,85 |
| TPA-S-2,0-21 | 2,0 | 210 | | | 50 | 0,36 | 2,20 | 3,12 | 3,36 |
| TPA-S-2,5-15 | 2,5 | 150 | 30 x 10 | | 100 | 0,31 | 2,09 | 2,89 | 3,09 |
| TPA-S-2,5-20 | 2,5 | 200 | | | 50 | 0,42 | 2,64 | 3,72 | 3,99 |
| TPA-S-2,5-25 | 2,5 | 250 | | | | 0,54 | 3,19 | 4,58 | 4,92 |
| TPA-S-3,0-16 | 3,0 | 160 | 40 x 10 | 18 x 22 | | 0,45 | 3,08 | 4,24 | 4,52 |
| TPA-S-3,0-20 | 3,0 | 200 | | | | 0,57 | 3,52 | 4,98 | 5,35 |
| TPA-S-3,0-28 | 3,0 | 280 | | | 25 | 0,81 | 4,40 | 6,63 | 7,19 |
| TPA-S-4,0-18 | 4,0 | 180 | 40 x 12 | | 50 | 0,61 | 3,74 | 5,31 | 5,70 |
| TPA-S-4,0-24 | 4,0 | 240 | | | 25 | 0,81 | 4,73 | 6,81 | 7,33 |
| TPA-S-4,0-32 | 4,0 | 320 | | | | 1,11 | 5,94 | 8,79 | 9,50 |
| TPA-S-5,0-18 | 5,0 | 180 | 40 x 15 | | | 0,78 | 4,73 | 6,73 | 7,23 |
| TPA-S-5,0-24 | 5,0 | 240 | | | | 1,05 | 5,61 | 8,31 | 8,98 |
| TPA-S-5,0-40 | 5,0 | 400 | | | | 1,76 | 8,58 | 13,10 | 14,23 |
| TPA-S-5,3-22 | 5,3 | 220 | 60 x 12 | 26 x 30 | | 1,10 | 6,16 | 8,98 | 9,69 |
| TPA-S-5,3-26 | 5,3 | 260 | | | | 1,32 | 7,04 | 10,43 | 11,28 |
| TPA-S-5,3-34 | 5,3 | 340 | | | 1 | 1,77 | 9,57 | 14,12 | 15,25 |
| TPA-S-7,5-26 | 7,5 | 260 | 60 x 15 | | | 1,64 | 10,12 | 14,33 | 15,38 |
| TPA-S-7,5-30 | 7,5 | 300 | | | | 1,95 | 11,00 | 16,01 | 17,26 |
| TPA-S-7,5-42 | 7,5 | 420 | | | | 2,73 | 14,85 | 21,86 | 23,61 |
| TPA-S-10,0-30 | 10,0 | 300 | 60 x 20 | | | 2,60 | 13,42 | 20,10 | 21,77 |
| TPA-S-10,0-37 | 10,0 | 370 | | | | 3,25 | 16,39 | 24,74 | 26,82 |
| TPA-S-10,0-52 | 10,0 | 520 | | 35 x 46 | | 4,59 | 22,22 | 34,01 | 36,95 |
| TPA-S-14,0-37 | 14,0 | 370 | 80 x 20 | | | 4,14 | 26,62 | 37,25 | 39,91 |
| TPA-S-14,0-46 | 14,0 | 460 | | | | 5,25 | 32,67 | 46,15 | 49,52 |
| TPA-S-17,0-50 | 17,0 | 500 | 90 x 20 | | | 7,00 | 41,58 | 59,56 | 64,05 |
| TPA-S-22,0-50 | 22,0 | 500 | 90 x 25 | | | 8,16 | 42,90 | 63,85 | 69,09 |
| TPA-S-22,0-62 | 22,0 | 620 | | | | 10,17 | 53,13 | 79,25 | 85,78 |

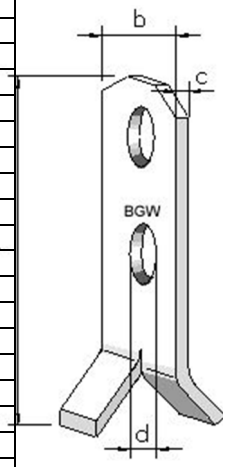


**<u>For Information:</u>**
The ***BGW***-two-hole anchor is type-tested: No. S-N/080538 from 16.06.2011. The test report as well as all necessary documents fort he installation, qou get quickly under *<u>www.BGW-Bohr.de</u>* / quality.

## *BGW-Two-hole Anchor*

| art.-no. | load (t) | length l mm | flat steel b + c mm | Ø-hole d mm | pack.-unit piece | weight KG / pcs. | price (blank) | price (galvanized) | price (hot dipped galvanized) |
|---|---|---|---|---|---|---|---|---|---|
| TPA-Z-0,7-09 | 0,7 | 90 | 30 x 5 | 14 x 20 | 200 | 0,09 | 1,10 | 1,33 | 1,39 |
| TPA-Z-1,4-09 | 1,4 | 90 | 30 x 6 | | | 0,10 | 1,10 | 1,36 | 1,42 |
| TPA-Z-2,0-09 | 2,0 | 90 | 30 x 8 | | 150 | 0,14 | 1,54 | 1,90 | 1,99 |
| TPA-Z-2,5-09 | 2,5 | 90 | 30 x 10 | | | 0,17 | 1,76 | 2,20 | 2,31 |
| TPA-Z-3,0-12 | 3,0 | 120 | 40 x 10 | 18 x 22 | 50 | 0,31 | 2,64 | 3,44 | 3,64 |
| TPA-Z-4,0-12 | 4,0 | 120 | 40 x 12 | | | 0,37 | 3,41 | 4,36 | 4,60 |
| TPA-Z-5,0-12 | 5,0 | 120 | 40 x 15 | | | 0,46 | 3,85 | 5,03 | 5,33 |
| TPA-Z-5,3-16 | 5,3 | 160 | 60 x 12 | 26 x 26 | 25 | 0,72 | 5,39 | 7,24 | 7,70 |
| TPA-Z-7,5-16 | 7,5 | 160 | 60 x 16 | | | 0,96 | 7,26 | 9,73 | 10,34 |
| TPA-Z-10,0-17 | 10,0 | 170 | 60 x 20 | 29 x 29 | | 1,37 | 9,02 | 12,54 | 13,42 |
| TPA-Z-14,0-24 | 14,0 | 240 | 80 x 20 | 35 x 35 | 1 | 2,56 | 16,69 | 23,26 | 24,91 |
| TPA-Z-17,0-30 | 17,0 | 300 | 90 x 20 | | | 3,90 | 26,29 | 36,31 | 38,81 |
| TPA-Z-22,0-30 | 22,0 | 300 | 90 x 25 | | | 4,74 | 27,94 | 40,11 | 43,16 |
| TPA-Z-26,0-30 | 26,0 | 300 | 120 x 30 | 35 x 46 | | 7,35 | 41,80 | 60,67 | 65,39 |

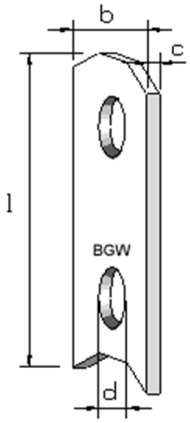

# *BGW*-TPA-Universal- and Erection Anchor

09/18(09/18)

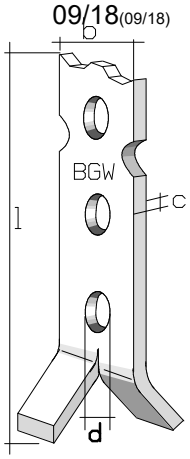


## *BGW* – TPA universal anchor

| art.-no. | load (t) | length l mm | flat steel b + c mm | Ø-hole d mm | pack.-unit piece | weight KG / pcs. | price | price (galvanized) |
|---|---|---|---|---|---|---|---|---|
| TPA-U-1,25-10 | 1,25 | 100 | 30 x 60 | 10 | 100 | 0,11 | 1,54 | 1,82 |
| TPA-U-1,25-12 | 1,25 | 120 | | | | 0,15 | 1,62 | 2,01 |
| TPA-U-1,25-12F | 1,25 | | | | | 0,16 | --- | 2,10 |

## *BGW* – TPA erection anchor – both sides

| art.-no. | load (t) | length l mm | flat steel b + c mm | | Ø-hole d mm | pack.-unit piece | weight KG / pcs. | price (blank) | price (galvanized) | price (hot dipped galvanized) |
|---|---|---|---|---|---|---|---|---|---|---|
| TPA-SA-1,4-20 | 1,4 | 200 | 50 | 6 | 15 x 15 | 50 | 0,424 | 4,18 | 5,26 | 5,53 |
| TPA-SA-2,5-23 | 2,5 | 230 | 50 | 10 | | 25 | 0,892 | 5,83 | 8,12 | 8,69 |
| TPA-SA-4,0-27 | 4,0 | 270 | 70 | 12 | 20 x 20 | 20 | 1,630 | 8,91 | 13,10 | 14,14 |
| TPA-SA-5,0-29 | 5,0 | 290 | 70 | 15 | | | 2,156 | 11,22 | 16,77 | 18,15 |
| TPA-SA-7,5-32 | 7,5 | 320 | 100 | 15 | 29 x 29 | 1 | 3,276 | 17,93 | 26,35 | 28,46 |
| TPA-SA-10,0-39 | 10,0 | 390 | 100 | 20 | | | 4,400 | 25,30 | 36,60 | 39,42 |

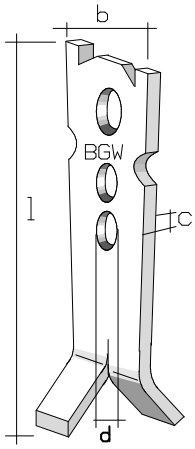


## *BGW* – TPA erection anchor – both sides – conical

| art.-no. | load (t) | length l mm | flat steel b + c mm | | Ø-hole d mm | pack.-unit piece | weight KG / pcs. | price (blank) | price (galvanized) | price (hot dipped galvanized) |
|---|---|---|---|---|---|---|---|---|---|---|
| TPA-SA-1,4-20K | 1,4 | 200 | 50 | 6 | 15 x 15 | 50 | 0,380 | 4,39 | 5,37 | 5,61 |
| TPA-SA-2,5-23K | 2,5 | 230 | 50 | 10 | | 25 | 0,674 | 6,12 | 7,84 | 8,27 |
| TPA-SA-4,0-27K | 4,0 | 270 | 70 | 12 | 20 x 20 | 20 | 1,446 | 9,36 | 13,08 | 14,01 |
| TPA-SA-5,0-29K | 5,0 | 290 | 70 | 15 | | | 1,894 | 11,78 | 16,63 | 17,85 |
| TPA-SA-7,5-32K | 7,5 | 320 | 100 | 15 | 29 x 29 | 1 | 3,760 | 18,83 | 28,49 | 30,90 |
| TPA-SA-10,0-39K | 10,0 | 390 | 100 | 20 | | | 4,160 | 25,30 | 35,98 | 38,65 |
| TPA-SA-12,5-50K | 12,5 | 500 | 150 | 20 | 36 x 36 | | 6,438 | 64,24 | 41,84 | 84,91 |
| TPA-SA-17,0-50K | 17,0 | 500 | 150 | 22 | | | 6,820 | 77,55 | 95,06 | 99,44 |
| TPA-SA-22,0-50K | 22,0 | 500 | 150 | 30 | | | 9,960 | 82,72 | 108,30 | 114,69 |

## *BGW* – TPA erection anchor – one side

| art.-no. | load (t) | length l mm | flat steel b + c mm | | Ø-hole d mm | pack.-unit piece | weight KG / pcs. | price (blank) | price (galvanized) | price (hot dipped galvanized) |
|---|---|---|---|---|---|---|---|---|---|---|
| TPA-SE-1,4-20 | 1,4 | 200 | 40 | 6 | 15 x 15 | 50 | 0,320 | 4,18 | 5,00 | 5,21 |
| TPA-SE-2,5-23 | 2,5 | 230 | 40 | 10 | | 25 | 0,630 | 5,94 | 7,56 | 7,96 |
| TPA-SE-4,0-27 | 4,0 | 270 | 55 | 12 | 20 x 20 | | 1,250 | 9,02 | 12,23 | 13,03 |
| TPA-SE-5,0-29 | 5,0 | 290 | 55 | 15 | | | 1,640 | 11,33 | 15,54 | 16,59 |
| TPA-SE-7,5-32 | 7,5 | 320 | 80 | 15 | 29 x 29 | 1 | 2,652 | 18,15 | 24,96 | 26,66 |
| TPA-SE-10,0-39 | 10,0 | 390 | 80 | 20 | | | 4,416 | 25,52 | 36,87 | 52,81 |
| TPA-SE-12,5-50 | 12,5 | 500 | 115 | 20 | 36 x 46 | | 8,500 | 63,58 | 85,41 | 90,87 |
| TPA-SE-17,0-50 | 17,0 | 500 | 115 | 25 | | | 10,800 | 76,78 | 104,51 | 111,45 |
| TPA-SE-22,0-50 | 22,0 | 500 | 115 | 30 | | | 13,000 | 81,95 | 115,33 | 123,68 |

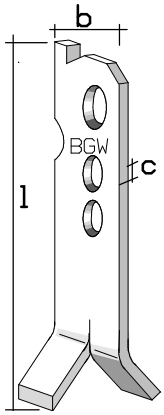


## *BGW* –TPA Plate Anchor

| art.-no. | load (t) | height h mm | plate mm | flat steel b + c mm | | Ø-hole d mm | pack.-unit piece | weight KG / pcs. | price (blank) | price (galvanized) | price (hot dipped galvanized) |
|---|---|---|---|---|---|---|---|---|---|---|---|
| TPA-P-1,4-50 | 1,4 | 50 | 80 x 80 | 30 | 6 | 14 x 20 | 50 | 0,45 | 6,49 | 7,65 | 7,93 |
| TPA-P-2,5-08 | 2,5 | 80 | 80 x 80 | 30 | 10 | | | 0,56 | 7,04 | 8,48 | 8,84 |
| TPA-P-5,0-12 | 5,0 | 120 | 100 x 100 | 40 | 15 | 18 x 22 | 25 | 1,22 | 11,11 | 14,24 | 15,03 |
| TPA-P-10,0-16 | 10,0 | 160 | 140 x 140 | 60 | 20 | 26 x 30 | 1 | 3,11 | 20,57 | 28,56 | 30,55 |

***Other dimensions on request!***

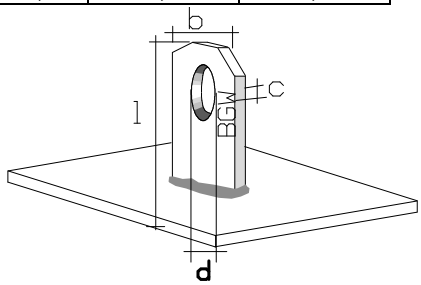

# *BGW*-TPA-Flatfoot-, Sandwichpannel- Anchor und Anchorbars

09/18(09/18)

## *BGW* – TPA Flatfoot anchor

| art.-no. | load (t) | height h mm | flat steel b + c mm | | Ø-hole d mm | pack.-unit piece | weight KG / pcs. | price (blank) | price (galvanized) | price (hot dipped galvanized) |
|---|---|---|---|---|---|---|---|---|---|---|
| TPA-F-0,7-60 | 0,7 | 60 | 30 | 5 | 14 x 20 | 100 | 0,076 | 2,53 | 2,74 | 2,79 |
| TPA-F-1,4-60 | 1,4 | 60 | 30 | 6 | | | 0,110 | 2,75 | 3,03 | 3,10 |
| TPA-F-2,0-70 | 2,0 | 70 | 30 | 8 | | | 0,184 | 3,19 | 3,65 | 3,77 |
| TPA-F-2,5-70 | 2,5 | 70 | 30 | 10 | | | 0,205 | 3,52 | 4,06 | 4,19 |
| TPA-F-3,0-09 | 3,0 | 90 | 40 | 10 | 18 x 22 | 50 | 0,408 | 4,62 | 5,67 | 5,94 |
| TPA-F-4,0-11 | 4,0 | 110 | 40 | 12 | | 25 | 0,490 | 5,17 | 6,43 | 6,74 |
| TPA-F-5,0-12 | 5,0 | 120 | 40 | 15 | | | 0,694 | 6,49 | 8,26 | 8,70 |
| TPA-F-5,3-15 | 5,3 | 150 | 60 | 12 | 26 x 30 | | 0,996 | 7,81 | 10,38 | 11,02 |
| TPA-F-7,5-17 | 7,5 | 170 | 60 | 15 | | 1 | 1,428 | 10,23 | 13,90 | 14,82 |
| TPA-F-10,0-20 | 10,0 | 200 | 60 | 20 | | | 2,268 | 13,09 | 18,92 | 20,38 |
| TPA-F-12,5-22 | 12,5 | 220 | 80 | 20 | 35 x 46 | | 4,140 | 19,03 | 29,66 | 32,32 |
| TPA-F-17,0-27 | 17,0 | 270 | 80 | 25 | | | 5,800 | 27,50 | 42,39 | 46,12 |
| TPA-F-22,0-300 | 22,0 | 300 | 90 | 25 | | | 7,560 | 42,68 | 62,09 | 66,95 |

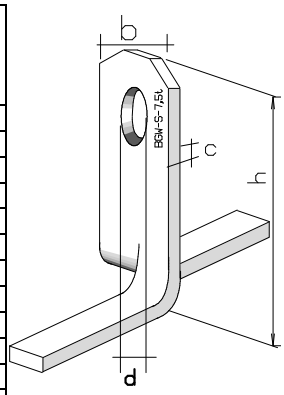


## *BGW* – TPA Sandwichpannel anchor

| art.-no. | load (t) | height h mm | flat steel b + c mm | | Ø-hole d mm | pack.-unit piece | weight KG / pcs. | price (blank) | price (galvanized) | price (hot dipped galvanized) |
|---|---|---|---|---|---|---|---|---|---|---|
| TPA-ST-2,5-25 | 2,5 | 250 | 40 | 10 | 18 x 22 | 25 | 0,58 | 6,60 | 8,09 | 8,46 |
| TPA-ST-5,0-30 | 5,0 | 300 | 60 | 16 | 26 x 30 | 20 | 1,80 | 10,89 | 15,51 | 16,67 |
| TPA-ST-7,5-35 | 7,5 | 350 | 60 | 15 | | 1 | 2,78 | 19,14 | 26,28 | 28,06 |
| TPA-ST-10,0-35 | 10,0 | 350 | 80 | 20 | 35 x 46 | | 3,59 | 24,97 | 34,19 | 36,49 |
| TPA-ST-17,0-40 | 17,0 | 400 | 100 | 20 | | | 6,10 | 72,25 | 87,91 | 91,83 |

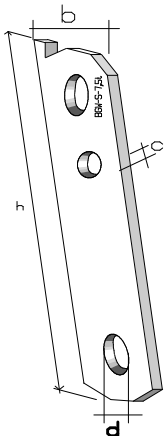


## *BGW* – Anchor bars

| art.-no. | a [mm] | thickness b [mm] | weight kg/price | price €/piece |
|---|---|---|---|---|
| A-250-60-15 | 17,5 | 15 | 1,6 | 5,20 |
| A-250-60-15-22 | 20 | 15 | 1,6 | 5,49 |
| A-250-60-20 | 17,5 | 20 | 2,1 | 6,14 |

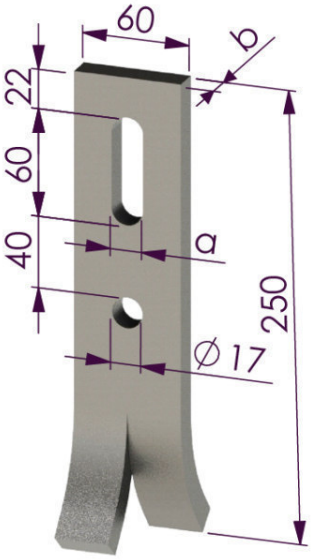


## *BGW* – Anchor bars with toothing

| art.-no. | a [mm] | thickness b [mm] | weight kg/price | price €/piece |
|---|---|---|---|---|
| A-250-60-15-Z | 17,5 | 15 | 1,5 | 6,47 |
| A-250-60-15-22-Z | 20 | 15 | 1,5 | 6,48 |
| A-250-60-20-Z | 17,5 | 20 | 2,0 | 7,41 |

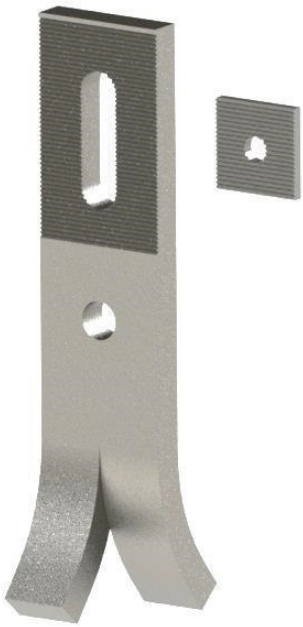

## *BGW* – toothed washer for anchor bars

| art.-no. | dimensions [mm] | weight kg/pcs | price €/pcs |
|---|---|---|---|
| 7291 | 40x40x6 | 0,056 | 1,98 |

# *BGW*-Accessory parts for Spread anchor

## *BGW*-Ring coupling *with chain link, or Bracket and crossbar*

Instruction Manual:
http://bgw-bohr.de_Ringkupplung_Verwendungsanleitung.pdf

| art.-no. | load t | weight kg | price €/piece |
|---|---|---|---|
| TPA-R1-2,50 | 2,5 | 1,08 | 57,25 |
| TPA-R1-5,00 | 5,0 | 2,88 | 77,25 |
| TPA-R1-10,0 | 10,0 | 7 | 135,85 |
| TPA-R1-26,0 | 26,0 | 23 | 313,40 |

## *BGW*-Ring coupling *with rope*

| art.-no. | load t | weight kg | price €/piece |
|---|---|---|---|
| TPA-R1-1,25-S | 1,25 | 0,43 | 54,00 |
| TPA-R1-2,50-S | 2,5 | 1,51 | 62,00 |
| TPA-R1-5,00-S | 5,0 | 2,98 | 80,00 |
| TPA-R1-10,0-S | 10,0 | 7,10 | 140,00 |
| TPA-R1-26,0-SO | 26,0 | 10,10 | 325,00 |

EC declaration of conformity:
http://bgw-bohr.de/pdf/CE_Zeichen/EG-Konf_BGW-Ringkupplung_mit_Seil_alle_Laststufen.pdf

## *BGW*-Rubber pocket former

| art.-no. | load t | weight kg | price €/piece |
|---|---|---|---|
| TPA-A -1,25 | 1,25 | 0,051 | 8,60 |
| TPA-A -2,5 | 2,5 | 0,075 | 8,90 |
| TPA-A -5,0 | 5,0 | 0,22 | 10,83 |
| TPA-A -10,0 | 10,0 | 0,572 | 25,66 |
| TPA-A -26,0 | 26,0 | 1,69 | 71,93 |

## *BGW*-Pocket former PU with magnets

| art.-no. | load t | weight kg | price €/piece |
|---|---|---|---|
| TPA-A-1,25M | 1,25 | 0,180 | 65,00 |
| TPA-A-2,5M | 2,5 | 0,265 | 80,00 |
| TPA-A-5,0M | 5,0 | 0,480 | 95,00 |
| TPA-A-10,0M | 10,0 | 1,2 | 120,00 |
| TPA-A-26,0M | 26,0 | 3,3 | 240,00 |

# *BGW*-Accessory parts for spread anchor



## *BGW*-Pocket former for one-time use made of hard plastic

| art.-no. | suitable for | weight kg | price €/piece |
|---|---|---|---|
| TPA-AK-1,25 | 1,25t Universal Anchor | 0,014 | 0,46 |
| TPA-AK-1,4 | 1,4t Spread Anchor<br>1,4t Two-hole Anchor<br>1,4t Erection Anchor – both sides<br>1,4t Flatfoot Anchor | 0,038 | |
| TPA-AK-2,5 | 2,5t Erection Anchor – both sides | 0,030 | 0,54 |
| TPA-AK-4,0 | 4t Erection Anchor – both sides | 0,058 | 0,68 |
| TPA-AK-5,0 | 5t Erection Anchor – both sides | 0,054 | 0,77 |

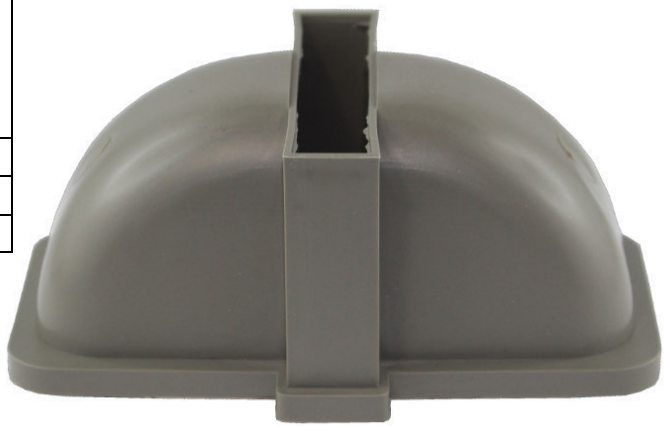

## *BGW*-Holding plate for nailing or welding

| art.-no. | load t | weight kg | price €/piece |
|---|---|---|---|
| TPA-H1-1,25 | 1,25 | 0,025 | 4,00 |
| TPA-H1-2,5 | 2,5 | 0,055 | 4,10 |
| TPA-H1-5,0 | 5,0 | 0,131 | 4,40 |
| TPA-H1-10,0 | 10,0 | 0,32 | 7,90 |
| TPA-H1-26,0 | 26,0 | 0,98 | 11,50 |

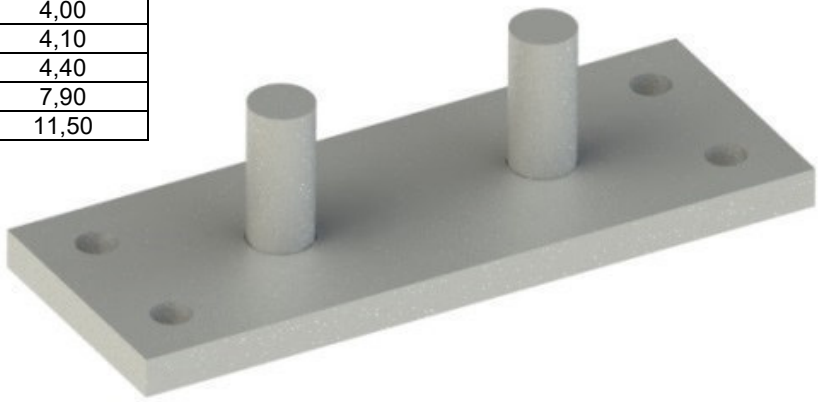

## *BGW*- Magnetic plate HM 9 for flexible positioning

| art.-no. | Load level of the anchor | adhesion | external dimensions | concrete cover | weight kg | price €/piece |
|---|---|---|---|---|---|---|
| HM9-4-1,25 | 1,25 t | 100kp | 83 x 45 | 12 mm | 0,42 | 73,00 |
| HM9-6-2,5 | 2,5 t | 100 kp | 144 x 64 | 12 mm | 1,08 | 74,14 |
| HM9-12-2,5 | 2,5 t | 180 kp | 144 x 64 | 12 mm | | 102,26 |
| HM9-6-5,0 | 5,0 t | 100 kp | 144 x 64 | 12 mm | 0,887 | 74,14 |
| HM9-12-5,0 | 5,0 t | 180 kp | 144 x 64 | 12 mm | | 102,26 |
| HM9-6-10,0 | 10,0 t | 100 kp | 210 x 95 | 15 mm | 1 | 85,00 |
| HM9-10-10,0 | 10,0 t | 170 kp | 210 x 95 | 15 mm | 0,543 | 111,00 |
| HM9-16-26,0 | 26,0 t | 270 kp | 370 x 140 | 15 mm | 1 | 200,00 |

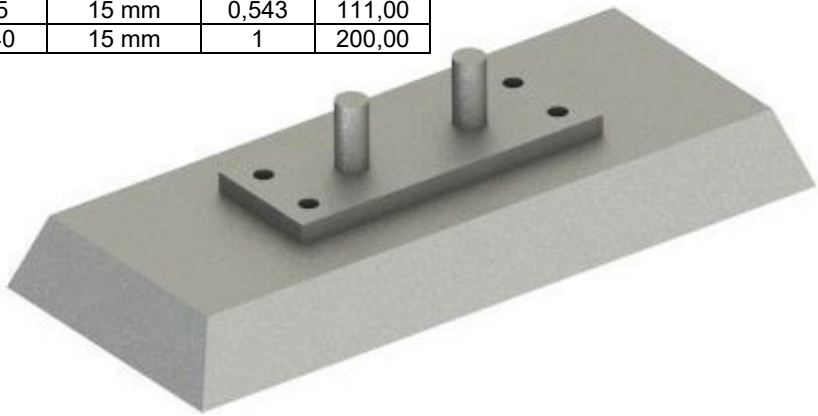

**Schlüssel für Haftmagnet HM9**

| Art.-Nr. | Preis €/Stück |
|---|---|
| SchlüsselHM9 | 17,90 |

# *BGW*-capstan lifter

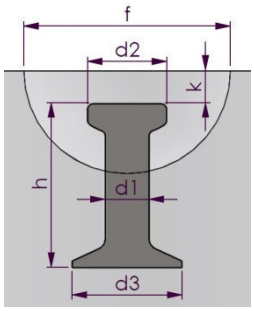


06/18(04/18)

**BGW-capstan-lifters are suitable for the transport of all kinds of concrete elements.**

**Marking:**
**BGW (=producer)**
**K (=Anchor type z.B. K5=load 5tons)**

**Metallic breaking load see BGR 106**

***additional charge for galvanized: 1,00 €/kg***
***additional charge for hot dip galvanized: 1,50 €/kg***

*Prices for* ***capstan lifters stainless steel 1.4301 / AISI 304 / V2A: 22,00 €/kg or 1.4571/1.4401 / AISI 316 / V4A: 33,00 €/kg***

*Other dimensions are avaliable on request..*

| art.-no. | load [t] | length h [mm] | shaft Ø d1 [mm] | head Ø d2 [mm] | foot Ø d3 [mm] | concrete cover k [mm] | recess Ø f [mm] | Packaging unit piece | weigth kg/piece | price €/piece |
|---|---|---|---|---|---|---|---|---|---|---|
| 10010 | 1,3 | 35 | 10 | 19 | 25 | 10 | 60 | 400 | 0,04 | 0,43 |
| 1001 | 1,3 | 40 | 10 | 19 | 25 | 10 | 60 | 400 | 0,045 | 0,43 |
| 1003 | 1,3 | 45 | 10 | 19 | 25 | 10 | 60 | 400 | 0,047 | 0,43 |
| 1005 | 1,3 | 50 | 10 | 19 | 25 | 10 | 60 | 400 | 0,052 | 0,44 |
| 1000 | 1,3 | 55 | 10 | 19 | 25 | 10 | 60 | 400 | 0,056 | 0,48 |
| 1002 | 1,3 | 65 | 10 | 19 | 25 | 10 | 60 | 300 | 0,06 | 0,57 |
| 1004 | 1,3 | 85 | 10 | 19 | 25 | 10 | 60 | 300 | 0,073 | 0,59 |
| 1006 | 1,3 | 120 | 10 | 19 | 25 | 10 | 60 | 200 | 0,096 | 0,64 |
| 10070 | 1,3 | 170 | 10 | 19 | 25 | 10 | 60 | 200 | 0,131 | 0,68 |
| 1008 | 1,3 | 240 | 10 | 19 | 25 | 10 | 60 | 100 | 0,168 | 0,7 |
| 1010-2,5-40 | 2,5 | 40 | 14 | 26 | 35 | 11 | 74 | 200 | 0,106 | 0,67 |
| 1011 | 2,5 | 45 | 14 | 26 | 35 | 11 | 74 | 200 | 0,118 | 0,67 |
| 1010 | 2,5 | 55 | 14 | 26 | 35 | 11 | 74 | 200 | 0,12 | 0,68 |
| 1012 | 2,5 | 65 | 14 | 26 | 35 | 11 | 74 | 200 | 0,13 | 0,69 |
| 1014 | 2,5 | 85 | 14 | 26 | 35 | 11 | 74 | 150 | 0,15 | 0,72 |
| 1160 | 2,5 | 100 | 14 | 26 | 35 | 11 | 74 | 100 | 0,173 | 0,75 |
| 1016 | 2,5 | 120 | 14 | 26 | 35 | 11 | 74 | 100 | 0,19 | 0,77 |
| 1018 | 2,5 | 140 | 14 | 26 | 35 | 11 | 74 | 100 | 0,216 | 0,84 |
| 1020 | 2,5 | 170 | 14 | 26 | 35 | 11 | 74 | 100 | 0,247 | 0,96 |
| 10211 | 2,5 | 210 | 14 | 26 | 35 | 11 | 74 | 50 | 0,308 | 1,05 |
| 1021 | 2,5 | 240 | 14 | 26 | 35 | 11 | 74 | 50 | 0,336 | 1,14 |
| 1022 | 2,5 | 270 | 14 | 26 | 35 | 11 | 74 | 50 | 0,37 | 1,3 |
| 1023 | 4 | 55 | 18 | 36 | 45 | 15 | 94 | 100 | 0,25 | 0,97 |
| 1019 | 4 | 65 | 18 | 36 | 45 | 15 | 94 | 100 | 0,258 | 1,02 |
| 1024 | 4 | 75 | 18 | 36 | 45 | 15 | 94 | 100 | 0,27 | 1,1 |
| 1059 | 4 | 85 | 18 | 36 | 45 | 15 | 94 | 50 | 0,286 | 1,15 |
| 1025 | 4 | 95 | 18 | 36 | 45 | 15 | 94 | 50 | 0,306 | 1,2 |
| 1026 | 4 | 100 | 18 | 36 | 45 | 15 | 94 | 50 | 0,32 | 1,23 |
| 1028 | 4 | 120 | 18 | 36 | 45 | 15 | 94 | 50 | 0,356 | 1,27 |
| 1027 | 4 | 150 | 18 | 36 | 45 | 15 | 94 | 50 | 0,416 | 1,33 |
| 1030 | 4 | 170 | 18 | 36 | 45 | 15 | 94 | 50 | 0,461 | 1,41 |
| 1031 | 4 | 210 | 18 | 36 | 45 | 15 | 94 | 50 | 0,536 | 1,65 |
| 10310 | 4 | 220 | 18 | 36 | 45 | 15 | 94 | 25 | 0,556 | 1,7 |
| 1032 | 4 | 240 | 18 | 36 | 45 | 15 | 94 | 25 | 0,596 | 1,82 |
| 1033 | 4 | 300 | 18 | 36 | 45 | 15 | 94 | 25 | 0,716 | 2,03 |
| 1034 | 4 | 340 | 18 | 36 | 45 | 15 | 94 | 25 | 0,796 | 2,17 |
| 1045 | 5 | 55 | 20 | 36 | 50 | 15 | 94 | 50 | 0,256 | 1,25 |
| 1047 | 5 | 65 | 20 | 36 | 50 | 15 | 94 | 50 | 0,299 | 1,29 |
| 1036 | 5 | 75 | 20 | 36 | 50 | 15 | 94 | 50 | 0,327 | 1,32 |
| 1037 | 5 | 85 | 20 | 36 | 50 | 15 | 94 | 50 | 0,35 | 1,46 |
| 1038 | 5 | 95 | 20 | 36 | 50 | 15 | 94 | 50 | 0,369 | 1,6 |
| 1039 | 5 | 100 | 20 | 36 | 50 | 15 | 94 | 50 | 0,388 | 1,61 |
| 1043 | 5 | 110 | 20 | 36 | 50 | 15 | 94 | 50 | 0,412 | 1,64 |
| 1040 | 5 | 120 | 20 | 36 | 50 | 15 | 94 | 50 | 0,437 | 1,69 |
| 10400 | 5 | 140 | 20 | 36 | 50 | 15 | 94 | 25 | 0,547 | 1,71 |
| 10410 | 5 | 160 | 20 | 36 | 50 | 15 | 94 | 25 | 0,555 | 1,73 |
| 1041 | 5 | 170 | 20 | 36 | 50 | 15 | 94 | 25 | 0,56 | 1,76 |
| 1042 | 5 | 180 | 20 | 36 | 50 | 15 | 94 | 25 | 0,564 | 1,79 |
| 1125 | 5 | 210 | 20 | 36 | 50 | 15 | 94 | 25 | 0,594 | 1,84 |
| 1044 | 5 | 240 | 20 | 36 | 50 | 15 | 94 | 25 | 0,724 | 2,07 |
| 10440 | 5 | 300 | 20 | 36 | 50 | 15 | 94 | 25 | 0,907 | 2,46 |
| 1046 | 5 | 340 | 20 | 36 | 50 | 15 | 94 | 25 | 0,967 | 3,16 |
| 1048 | 5 | 480 | 20 | 36 | 50 | 15 | 94 | 15 | 1,323 | 4,04 |

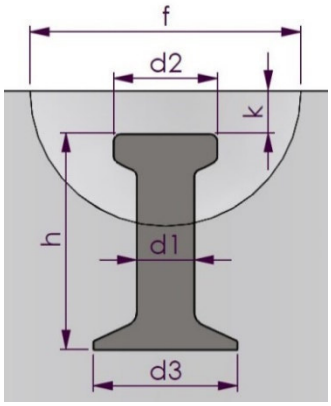

# *BGW*-capstan lifter

06/18(04/18)

| art.-no. | load [t] | length h [mm] | shaft Ø d1 [mm] | head Ø d2 [mm] | foot Ø d3 [mm] | concrete cover k [mm] | recess Ø f [mm] | packaging unit piece | weigth kg/piece | price €/piece |
|---|---|---|---|---|---|---|---|---|---|---|
| 10490 | 7,5 | 85 | 24 | 47 | 60 | 15 | 118 | 25 | 0,6 | 2,1 |
| 1049 | 7,5 | 95 | 24 | 47 | 60 | 15 | 118 | 25 | 0,626 | 2,2 |
| 1050 | 7,5 | 100 | 24 | 47 | 60 | 15 | 118 | 25 | 0,64 | 2,24 |
| 1051 | 7,5 | 105 | 24 | 47 | 60 | 15 | 118 | 25 | 0,654 | 2,27 |
| 1053 | 7,5 | 110 | 24 | 47 | 60 | 15 | 118 | 25 | 0,668 | 2,28 |
| 1052 | 7,5 | 120 | 24 | 47 | 60 | 15 | 118 | 25 | 0,704 | 2,29 |
| 1054 | 7,5 | 140 | 24 | 47 | 60 | 15 | 118 | 25 | 0,775 | 2,61 |
| 1055 | 7,5 | 150 | 24 | 47 | 60 | 15 | 118 | 25 | 0,823 | 2,65 |
| 1056 | 7,5 | 165 | 24 | 47 | 60 | 15 | 118 | 25 | 0,877 | 2,68 |
| 1058 | 7,5 | 200 | 24 | 47 | 60 | 15 | 118 | 25 | 1 | 3,11 |
| 1060 | 7,5 | 300 | 24 | 47 | 60 | 15 | 118 | 10 | 1,36 | 4,01 |
| 1061 | 7,5 | 540 | 24 | 47 | 60 | 15 | 118 | 1 | 2,2 | 6,38 |
| 1062 | 7,5 | 680 | 24 | 47 | 60 | 15 | 118 | 1 | 2,7 | 6,81 |
| 1064 | 10 | 115 | 28 | 47 | 70 | 15 | 118 | 25 | 0,905 | 4,08 |
| 1065 | 10 | 120 | 28 | 47 | 70 | 15 | 118 | 25 | 0,951 | 4,1 |
| 1066 | 10 | 135 | 28 | 47 | 70 | 15 | 118 | 25 | 1,024 | 4,39 |
| 1067 | 10 | 140 | 28 | 47 | 70 | 15 | 118 | 25 | 1,048 | 4,41 |
| 1068 | 10 | 150 | 28 | 47 | 70 | 15 | 118 | 25 | 1,075 | 4,43 |
| 1069 | 10 | 165 | 28 | 47 | 70 | 15 | 118 | 20 | 1,172 | 4,46 |
| 1070 | 10 | 170 | 28 | 47 | 70 | 15 | 118 | 20 | 1,19 | 4,48 |
| 1071 | 10 | 200 | 28 | 47 | 70 | 15 | 118 | 20 | 1,34 | 4,55 |
| 1072 | 10 | 210 | 28 | 47 | 70 | 15 | 118 | 15 | 1,359 | 4,59 |
| 1073 | 10 | 220 | 28 | 47 | 70 | 15 | 118 | 15 | 1,434 | 4,63 |
| 10730 | 10 | 250 | 28 | 47 | 70 | 15 | 118 | 15 | 1,538 | 4,75 |
| 10750 | 10 | 300 | 28 | 47 | 70 | 15 | 118 | 10 | 1,822 | 5,4 |
| 10741 | 10 | 325 | 28 | 47 | 70 | 15 | 118 | 10 | 1,851 | 5,63 |
| 1074 | 10 | 340 | 28 | 47 | 70 | 15 | 118 | 10 | 2,01 | 6,05 |
| 10760 | 10 | 420 | 28 | 47 | 70 | 15 | 118 | 1 | 2,358 | 6,65 |
| 10740 | 10 | 500 | 28 | 47 | 70 | 15 | 118 | 1 | 2,788 | 7,2 |
| 1075 | 10 | 540 | 28 | 47 | 70 | 15 | 118 | 1 | 3 | 7,82 |
| 1077 | 10 | 650 | 28 | 47 | 70 | 15 | 118 | 1 | 3,5 | 9,1 |
| 10770 | 10 | 680 | 28 | 47 | 70 | 15 | 118 | 1 | 3,654 | 9,52 |
| 10791 | 15 | 110 | 34 | 70 | 85 | 15 | 160 | 10 | 1,584 | 4,9 |
| 1079 | 15 | 120 | 34 | 70 | 85 | 15 | 160 | 10 | 1,688 | 4,91 |
| 1076 | 15 | 140 | 34 | 70 | 85 | 15 | 160 | 10 | 1,82 | 5,04 |
| 1078 | 15 | 165 | 34 | 70 | 85 | 15 | 160 | 10 | 1,99 | 5,09 |
| 1081 | 15 | 180 | 34 | 70 | 85 | 15 | 160 | 10 | 2,05 | 5,6 |
| 1085 | 15 | 200 | 34 | 70 | 85 | 15 | 160 | 10 | 2,27 | 6,45 |
| 1083 | 15 | 240 | 34 | 70 | 85 | 15 | 160 | 1 | 2,54 | 6,85 |
| 1080 | 15 | 300 | 34 | 70 | 85 | 15 | 160 | 1 | 3 | 7,65 |
| 1082 | 15 | 400 | 34 | 70 | 85 | 15 | 160 | 1 | 3,5 | 9,97 |
| 10820 | 15 | 550 | 34 | 70 | 85 | 15 | 160 | 1 | 4,58 | 11 |
| 10822 | 15 | 650 | 34 | 70 | 85 | 15 | 160 | 1 | 5,133 | 12,29 |
| 10821 | 15 | 840 | 34 | 70 | 85 | 15 | 160 | 1 | 6,93 | 14,9 |
| 1084 | 20 | 165 | 39 | 70 | 98 | 15 | 160 | 1 | 2,4 | 10,98 |
| 10861 | 20 | 180 | 39 | 70 | 98 | 15 | 160 | 1 | 2,43 | 11,5 |
| 1086 | 20 | 200 | 39 | 70 | 98 | 15 | 160 | 1 | 2,7 | 11,98 |
| 1087 | 20 | 230 | 39 | 70 | 98 | 15 | 160 | 1 | 2,9 | 12,53 |
| 1088 | 20 | 240 | 39 | 70 | 98 | 15 | 160 | 1 | 3 | 12,66 |
| 10880 | 20 | 250 | 39 | 70 | 98 | 15 | 160 | 1 | 3,25 | 12,97 |
| 1089 | 20 | 300 | 39 | 70 | 98 | 15 | 160 | 1 | 3,6 | 13,9 |
| 1090 | 20 | 340 | 39 | 70 | 98 | 15 | 160 | 1 | 4 | 14,37 |
| 1092 | 20 | 500 | 39 | 70 | 98 | 15 | 160 | 1 | 5,62 | 15,75 |
| 1091 | 20 | 1000 | 39 | 70 | 98 | 15 | 160 | 1 | 9,8 | 26,25 |
| 1093 | 32 | 200 | 50 | 88 | 135 | 27 | 214 | 1 | 5,7 | 19,42 |
| 1095 | 32 | 250 | 50 | 88 | 135 | 27 | 214 | 1 | 6,5 | 20,32 |
| 1099 | 32 | 260 | 50 | 88 | 135 | 27 | 214 | 1 | 6,6 | 20,61 |
| 1094 | 32 | 280 | 50 | 88 | 135 | 27 | 214 | 1 | 6,9 | 21 |
| 10996 | 32 | 320 | 50 | 88 | 135 | 27 | 214 | 1 | 7,5 | 28 |
| 10995 | 32 | 500 | 50 | 88 | 135 | 27 | 214 | 1 | 11,18 | 34 |
| 1096 | 32 | 700 | 50 | 88 | 135 | 27 | 214 | 1 | 14,28 | 38,73 |
| 1098 | 32 | 1000 | 50 | 88 | 135 | 27 | 214 | 1 | 18 | 52 |
| 1097 | 32 | 1200 | 50 | 88 | 135 | 27 | 214 | 1 | 21,1 | 57,06 |

**BGW-capstan-lifters are suitable for the transport of all kinds of concrete elements.**

Marking:
BGW (=producer)
K (=Anchor type z.B. K5=load 5tons)

Metallic breaking load see BGR 106

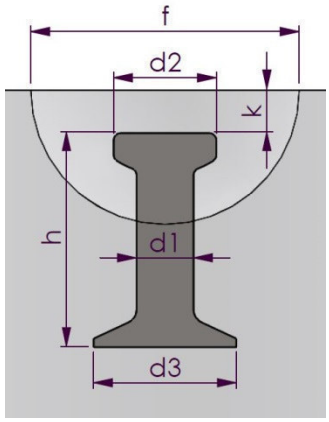


***additional charge for galvanised: 1,00 €/kg***
***additional charge for hot dip galvanised: 1,50 €/kg***

*Prices for capstanlifters stainless steel* ***1.4301 / AISI 304 / V2A: 22 €/kg or 1.4571/1.4401 / AISI 316 / V4A: 33 €/kg***

*Other dimensions are availiable on request.*

# *BGW*-capstan lifter – double head

06/18(04/18)

## *BGW*-capstan lifter – double head with a narrow/flattened food

| art.-no. | load t | length mm | Ø head mm | Ø foot mm | packaging unit piece | weight kg piece | price €/piece |
|---|---|---|---|---|---|---|---|
| 10742 | 10 | 340 | 47 | 47 | 1 | 2,01 | 16,25 |
| 10823 | 15 | 400 | 70 | 70 | 1 | 3,50 | 26,40 |
| 10921 | 20 | 500 | 70 | 70 | 1 | 5,62 | 47,20 |
| 10691 | 32 | 700 | 88 | 88 | 1 | 14,28 | 106,60 |
| 10692 | 32 | 1200 | 88 | 88 | 1 | 21,10 | 157,00 |

## *BGW*-capstan lifter – double head with plastic ring – hot dip galvanized

| art.-no. | load t | length mm | Ø head mm | Ø plastic ring mm | packaging unit piece | weight kg piece | price €/piece |
|---|---|---|---|---|---|---|---|
| 1015B | 2,5 | 85 | 25 | 25 | 150 | 0,160 | 0,97 |
| 1017B | 2,5 | 120 | 25 | 26 | 100 | 0,210 | 1,20 |

## *BGW*-capstan lifter – double head with steel ring

*The capstan lifter – double head (fast assembly anchor) is suitable for non-hinged semicircular pocket former. These pocket former can be attached magnetically or permanently to the formwork.*
*The lightly greased capstan lifter – double head is inserted into the pocket former before fitting into the concrete with the appropriate rubber sleeve.*

| art.-no. | load t | lenth mm | Ø head mm | Ø steel ring mm | Ø foot mm | packaging unit piece | weight kg piece | price €/piece |
|---|---|---|---|---|---|---|---|---|
| 1101 | 1,3 | 40 | 19 | 19 | 19 | 400 | 0,040 | 0,80 |
| 1009 | 1,3 | 50 | 19 | 19 | | 400 | 0,050 | 0,82 |
| 1007 | 1,3 | 65 | 19 | 19 | | 300 | 0,064 | 0,84 |
| 10071 | 1,3 | 120 | 19 | 19 | | 200 | 0,096 | 0,91 |
| 1103 | 2,5 | 60 | 26 | 26 | 26 or 35 | 200 | 0,086 | 0,94 |
| 1013 | 2,5 | 65 | 25,4 | 25,4 | | 200 | 0,140 | 0,95 |
| 1013 | 2,5 | 65 | 26 | 26 | | 200 | 0,140 | 0,95 |
| 1105 | 2,5 | 70 | 26 | 26 | | 150 | 0,145 | 0,96 |
| 1015 | 2,5 | 85 | 25,4 | 25,4 | | 150 | 0,160 | 0,97 |
| 1015 | 2,5 | 85 | 26 | 26 | | 150 | 0,160 | 0,97 |
| 1015 | 2,5 | 85 | 26,7 | 26,7 | | 150 | 0,170 | 0,97 |
| 1017 | 2,5 | 120 | 25,4 | 25,4 | | 100 | 0,210 | 1,02 |
| 1017-2 | 2,5 | 170 | 25,4 | 25,4 | | 100 | 0,260 | 1,45 |
| 1017-2 | 2,5 | 170 | 26 | 26 | | 100 | 0,260 | 1,45 |
| 1139 | 4,0 | 170 | 36 | 36 | 36 | 100 | 0,470 | 3,95 |
| 1128 | 5,0 | 85 | 36 | 36 | 48 | 50 | 0,295 | 2,79 |
| 1130 | 5,0 | 90 | 36 | 36 | 48 | 50 | 0,312 | 2,95 |
| 1132 | 5,0 | 95 | 36 | 36 | 48 | 50 | 0,329 | 3,11 |
| 1134 | 5,0 | 100 | 36 | 36 | 48 | 50 | 0,347 | 3,27 |
| 1136 | 5,0 | 110 | 36 | 36 | 36 | 50 | 0,381 | 3,60 |
| 10401 | 5,0 | 120 | 36 | 36 | 48 | 50 | 0,416 | 3,93 |
| 1137 | 5,0 | 240 | 36 | 36 | 48 | 25 | 0,692 | 6,54 |

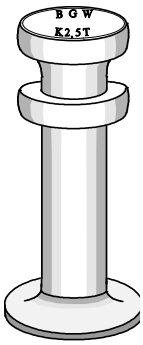


***additional charge for galvanized: 1,00 €/kg***
***additional charge for hot dip galvanized: 1,50 €/kg***

## *BGW*-capstan lifter offset (for sandwich panels)

*When ordering, please always state the anchor offset / center of gravity offset.*

| art.-no. | load t | lenth mm | weight kg | price €/piece |
|---|---|---|---|---|
| 1008abgekröpft | 1,3 | 240 | 0,1688 | 1,85 |
| 1022abgekröpft | 2,5 | 268 | 0,37 | 2,56 |
| 10340 | 4,0 | 406 | 0,92 | 4,90 |
| 1048abgekröpft | 5,0 | 480 | 1,323 | 5,91 |
| 1062abgekröpft | 7,5 | 680 | 2,7 | 12,24 |
| 10770abgekröpf | 10,0 | 680 | 3,65 | 15,11 |
| 10821abgekröpf | 15,0 | 840 | 6,93 | 27,67 |
| 1091abgekröpft | 20,0 | 1000 | 9,8 | 39,39 |

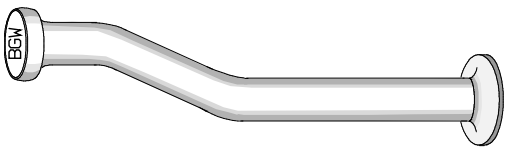

# *BGW*-Capstan Lifter -other types-

06/18(11/18)

## *BGW*-capstan-T-rod lifter

*All capstan lifters made of ripped steel bar DIN 480 only for axial lifting*

| art.-no. | load t | h mm | d mm | thread kg | price €/piece |
|---|---|---|---|---|---|
| 1102 | 2,5 | 400 | 14 | 0,496 | 3,60 |
| 1104 | 2,5 | 520 | 14 | 0,627 | 3,85 |
| 1106 | 4,0 | 510 | 20 | 1,29 | 6,85 |
| 1108 | 4,0 | 720 | 20 | 1,81 | 7,30 |
| 1110 | 4,0 | 1150 | 20 | 3 | 8,20 |
| 1112 | 5,0 | 580 | 20 | 1,5 | 8,35 |
| 1114 | 5,0 | 900 | 20 | 2,22 | 9,30 |
| 1115 | 7,5 | 540 | 25 | 2,2 | 14,88 |
| 1116 | 7,5 | 750 | 25 | 3 | 15,75 |
| 1118 | 7,5 | 1150 | 25 | 4,6 | 17,50 |
| 1120 | 10,0 | 870 | 28 | 4,36 | 20,20 |
| 1122 | 10,0 | 1300 | 28 | 6,28 | 22,70 |
| 1124 | 15,0 | 1080 | 32 | 7,39 | 39,90 |
| 1126 | 15,0 | 1550 | 32 | 10,77 | 47,25 |

*Other dimensions are availiable on request.*

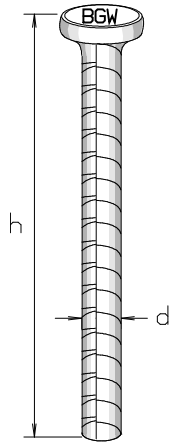


## BGW-Capstan-T-rod lifter offset

| art.-no. | load t | rod Ø d mm | offset a mm | distance b mm | length L mm | weight kg | price €/piece |
|---|---|---|---|---|---|---|---|
| 1102abgekröpft | 2,5 | 14 | 50 | 35 | 395 | 0,5 | 4,90 |
| 1104abgekröpft | 2,5 | 14 | 50 | 35 | 515 | 0,66 | 5,15 |
| 1112abgekröpft | 5,0 | 20 | 60 | 41 | 570 | 1,5 | 7,40 |
| 1114abgekröpft | 5,0 | 20 | 60 | 41 | 890 | 2,26 | 11,00 |
| 1116abgekröpft | 7,5 | 25 | 70 | 53 | 740 | 3,03 | 17,55 |
| 1118abgekröpft | 7,5 | 25 | 70 | 53 | 1140 | 4,53 | 19,30 |
| 1122abgekröpft | 10,0 | 28 | 70 | 53 | 1290 | 6,38 | 25,50 |
| 1124abgekröpft | 15,0 | 32 | 70 | 73 | 1070 | 7,39 | 43,90 |
| 1126abgekröpft | 15,0 | 32 | 70 | 73 | 1540 | 10,77 | 51,25 |

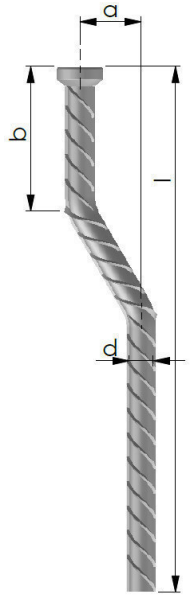


## *BGW*-Capstan Plate Lifter

| art.-no. | load t | h mm | plate mm | weight kg | price €/piece |
|---|---|---|---|---|---|
| 1200 | 2,5 | 55 | 70 x 70 x 6 | 0,348 | 3,07 |
| 1202 | 2,5 | 120 | 70 x 70 x 6 | 0,42 | 3,23 |
| 1204 | 5,0 | 55 | 90 x 90 x 8 | 0,764 | 4,05 |
| 1206 | 5,0 | 65 | 90 x 90 x 8 | 0,807 | 4,11 |
| 1208 | 5,0 | 95 | 90 x 90 x 8 | 0,877 | 4,24 |
| 1210 | 5,0 | 110 | 90 x 90 x 8 | 0,92 | 4,29 |
| 1212 | 10,0 | 115 | 90 x 90 x 10 | 1,42 | 10,13 |

*Other dimensions are availiable on request.*

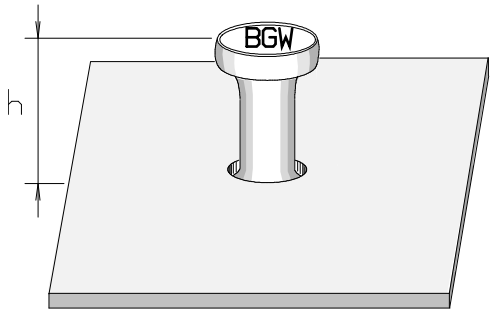


**EU/EC declaration of conformity:**
*http://www.bgw-bohr.de/pdf/CE-Erkl%E4rung_BGW-Kugelkopf-Plattenanker_alle%20Laststufen.pdf*

## *BGW*-Capstan-Eye-Anchor

| art.-no. | load t | length mm | Ø D mm lateral hole | packaging unit piece | packaging unit kg | weight kg | price €/piece |
|---|---|---|---|---|---|---|---|
| 1150 | 1,3 | 65 | 10 | 400 | 24,0 | 0,08 | 0,85 |
| 1152 | 2,5 | 90 | 14 | 150 | 24,0 | 0,2 | 1,40 |
| 1154 | 5,0 | 120 | 20 | 50 | 21,5 | 0,51 | 2,75 |
| 1156 | 10,0 | 180 | 28 | 20 | 24,0 | 1,235 | 7,15 |
| 1158 | 20,0 | 250 | 39 | 5 | 18,0 | 3,262 | 15,60 |

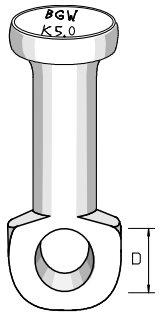

# *BGW*-capstan lifter - supply *BGW*-Kugelkopfanker-Zubehör 07/18 (01/18)

***BGW*-Round Rubber Pocket Former** and is used to fix BGW-ball head anchor, Rubber Pocket Former is divided in the middle, so that it can be open to accomodate BGW fixing nut / screw an ball anchor.

| art.-no. | for load | ∅ mm | concrete cover | packaging unit piece | weight kg/ packaging unit | price per piece |
|---|---|---|---|---|---|---|
| 1600 | 1,0 – **1,3 t** | 60 | 10 mm | 20 | 1,20 | 5,10 |
| 1602 | 2,0 – **2,5 t** | 74 | 11 mm | 10 | 1,00 | 7,10 |
| 1604 | 4,0 – **5,0 t** | 94 | 15 mm | 10 | 3,00 | 10,50 |
| 1606 | **7,5 t** | 118 | 15 mm | 10 | 4,60 | 15,00 |
| 1608 | 8,0 – **10 t** | 118 | 15 mm | 10 | 4,30 | 15,00 |
| 1610 | 15 – **20 t** | 160 | 15 mm | 2 | 2,10 | 32,70 |
| 1612 | **32 t** | 214 | 27 mm | 2 | 5,40 | 49,90 |

## *BGW*-Round Rubber Pocket Former complete with fixingscrew and fixingnut

| art.-no. complete with fixingscrew & fixingnut | for load | ∅ mm | concrete cover | packaging unit piece | weight kg/ packaging unit | €/ price complete (with nut & screw) |
|---|---|---|---|---|---|---|
| 1600K | 1,0 – **1,3 t** | 60 | 10 mm | 20 | 1,96 | 12,50 |
| 1602K | 2,0 – **2,5 t** | 74 | 11 mm | 10 | 2,07 | 15,40 |
| 1604K | 4,0 – **5,0 t** | 94 | 15 mm | 10 | 4,46 | 19,40 |
| 1606K | **7,5 t** | 118 | 15 mm | 10 | 6,30 | 24,40 |
| 1608K | 8,0 – **10 t** | 118 | 15 mm | 10 | 6,06 | 24,40 |
| 1610K | 15 – **20 t** | 160 | 15 mm | 2 | 2,63 | 43,50 |
| 1612K | **32 t** | 214 | 27 mm | 2 | 6,79 | 87,60 |

## *BGW*-Fixingnut flowdrilling

| art.-no. | load | thread | packaging unit piece | weight kg/ packaging unit | €/ price |
|---|---|---|---|---|---|
| 1644f | 1,0 – **1,3 t** | M 8 | 10 | 0,09 | 4,25 |
| 1646f | 2,0 – **2,5 t** | M 12 | 10 | 0,24 | 4,30 |
| 1640f | 4,0 – **5,0 t** | M 12 | 10 | 0,51 | 4,65 |
| 1642f | 7,5 – **10 t** | M 12 | 10 | 0,81 | 4,95 |
| 1648f | 15 – **20 t** | M 12 | 10 | 1,96 | 5,55 |
| 1649f | **32 t** | M 16 | 1 | 0,46 | 12,00 |

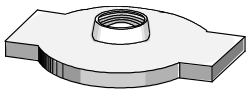

Fixingnut/
Fixiermutter

## *BGW*-Fixingnut: reinforced with a longer thread for automatic production

| art.-no. | load | thread | concrete cover h/mm | packaging unit piece | weight kg/ packaging unit | €/ price |
|---|---|---|---|---|---|---|
| 1644-1 | 1,0 – **1,3 t** | M 8 | 10 | 10 | 0,11 | 9,95 |
| 1646-1 | 2,0 – **2,5 t** | M 12 | 11 | 10 | 0,28 | 10,10 |
| 1640-1 | 4,0 – **5,0 t** | M 12 | 15 | 10 | 0,59 | 10,80 |
| 1642-1 | 7,5 – **10 t** | M 12 | 15 | 10 | 0,94 | 11,55 |
| 1648-1 | 15 – **20 t** | M 12 | 15 | 10 | 2,26 | 12,95 |
| 1649-1 | **32 t** | M 16 | 27 | 1 | 0,534 | 28,00 |

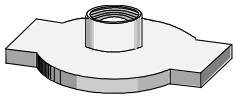

## *BGW*-Fixingscrew for Round Rubber Pocket Former

| art.-no. | load | thread | packaging unit piece | weight kg/ packaging unit | €/ price |
|---|---|---|---|---|---|
| 1620 | **1,0 – 1,3 t** | M 8 | 10 | 0,27 | 3,00 |
| 1622 | **2,0 – 2,5 t** | M 12 | 10 | 0,58 | 4,45 |
| 1624 | **4,0 – 5,0 t** | M 12 | 10 | 0,97 | 4,85 |
| 1628 | **7,5 – 10 t** | M 12 | 10 | 1,26 | 4,95 |
| 1630 | **15 – 20 t** | M 12 | 10 | 2,42 | 6,05 |
| 1632 | **32 t** | M 16 | 10 | 5,99 | 38,75 |

Fixingscrew/
Fixierschraube

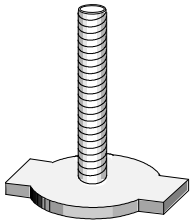

## *BGW*-Fixingscrew with wing nut DIN 315 for Round Rubber Pocket Former

| art.-no. | load | thread | packaging unit piece | weight kg/ packaging unit | €/ price |
|---|---|---|---|---|---|
| 1620-1 | **1,0 – 1,3 t** | M 8 | 10 | 0,38 | 3,30 |
| 1622-1 | **2,0 – 2,5 t** | M 12 | 10 | 1,07 | 4,80 |
| 1624-1 | **4,0 – 5,0 t** | M 12 | 10 | 1,46 | 5,20 |
| 1628-1 | **7,5 – 10 t** | M 12 | 10 | 1,75 | 5,30 |
| 1630-1 | **15 – 20 t** | M 12 | 10 | 2,91 | 6,40 |
| 1632-1 | **32 t** | M 16 | 10 | 6,87 | 39,50 |

Fixingscrew with
wing nut

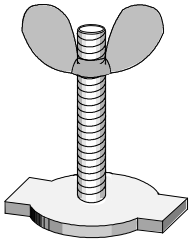

# *BGW-HM5* / capstan lifter - Supply

08/18 (08/18)

## *BGW*-HM5 / Kugelkopfanker – Zubehör 08/18 (08/18)

### *BGW*-Round Steel Pocket Former
### *BGW*-Aussparungskörper rund, aus Stahl

| art.-no | load | ∅ mm | concrete cover | ∅ drilling | weight kg | €/piece |
|---|---|---|---|---|---|---|
| 1650 | 1,0 – **1,3 t** | 60 | 10 mm | 20 | 0,40 | 37,70 |
| 1652 | 2,0 – **2,5 t** | 74 | 11 mm | 27 | 0,70 | 40,30 |
| 1654 | 4,0 – **5,0 t** | 94 | 15 mm | 37 | 1,60 | 40,30 |
| 1656 | 7,5 – **10 t** | 118 | 15 mm | 48 | 2,61 | 78,00 |
| 1658 | 15 – **20 t** | 160 | 15 mm | 70 | 7,00 | 107,90 |

### *BGW*-Round-Rubber-Pocket-Former with Magnet
### *BGW*-Aussparungskörper rund, PU m. Magnet

| art.-no | load | ∅ mm | concrete cover | ∅ drilling | €/piece |
|---|---|---|---|---|---|
| 1650GM | 1,0 – **1,3 t** | 60 | 10 mm | 20 | 75,40 |
| 1602GM | 2,0 – **2,5 t** | 74 | 11 mm | 27 | 80,60 |
| 1604GM | 4,0 – **5,0 t** | 94 | 15 mm | 37 | 80,60 |
| 1656GM | 7,5 – **10 t** | 118 | 15 mm | 48 | 117,00 |
| 1658GM | 15 – **20 t** | 160 | 15 mm | 70 | 146,90 |
| 1659GM | **32 t** | 214 | 27 mm | 88 | on demand |

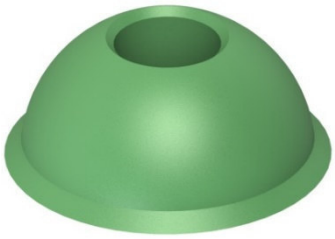

## *BGW*-Magnetic holder model HM5 / *BGW*-Haftmagnet Typ HM5

For fastening *BGW*-capstan-lifter on steel shutterings / zum Fixieren von *BGW*-Kugelkopfankern an der Stahlschalung

| art.-no | load anchor t | outer ∅ a [mm] | concrete cover mm | adhesion kp | interal ∅ b [mm] | €/piece |
|---|---|---|---|---|---|---|
| HM5-3-1,3 | 1,3 t | 60 | 10 | 50 | 20 | 39,90 |
| HM5-3-2,5 | 2,5 t | 74 | 11 | 50 | 27 | 53,20 |
| HM5-6-2,5 | 2,5 t | 74 | 11 | 100 | 27 | 66,50 |
| HM5-3-5,0 | 5,0 t | 94 | 15 | 50 | 37 | 59,80 |
| HM5-6-5,0 | 5,0 t | 94 | 15 | 100 | 37 | 73,00 |
| HM5-8-5,0 | 5,0 t | 94 | 15 | 120 | 37 | 106,30 |
| HM5-12-5,0 | 5,0 t | 94 | 15 | 180 | 37 | 132,90 |
| HM5-3-10,0 | 10,0 t | 118 | 15 | 50 | 48 | 73,10 |
| HM5-6-10,0 | 10,0 t | 118 | 15 | 100 | 48 | 86,41 |
| HM5-8-10,0 | 10,0 t | 118 | 15 | 120 | 48 | 113,00 |
| HM5-12-10,0 | 10,0 t | 118 | 15 | 180 | 48 | 146,20 |
| HM5-8-20,0 | 20,0 t | 160 | 15 | 120 | 71 | 250,00 |
| HM5-12-20 | 20,0 t | 160 | 15 | 180 | 71 | 290,00 |
| HM5-16-20 | 20,0 t | 160 | 15 | 240 | 71 | 330,00 |

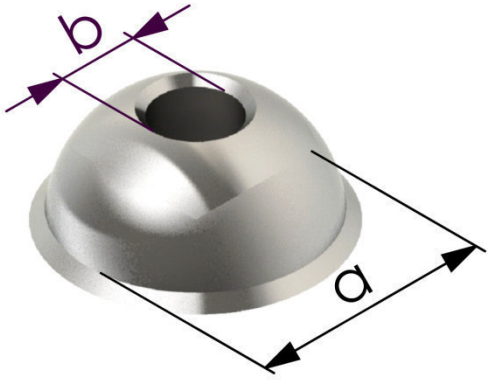


### *BGW*-Rubbersleeve for round steel pocket former
### *BGW*-Gummimanschette für Aussparungskörper rund, aus Stahl und Haftmagnet Typ HM5

| art.-no | load | outer ∅ | weight kg | €/piece |
|---|---|---|---|---|
| 1670 | 1,0 – **1,3 t** | 20 | 0,005 | 1,10 |
| 1679 | 2,0 – 2,5 t | 25 | 0,006 | 1,50 |
| 1672 | 2,0 – **2,5 t** | 27 | 0,006 | 1,60 |
| 1673 | 2,0 – **2,5 t** | 30 | 0,010 | 1,75 |
| 1674 | 4,0 – **5,0 t** | 37 | 0,016 | 2,40 |
| 1675 | 4,0 – 5,0 t | 38 | 0,017 | 2,45 |
| 1676 | **7,5 t** | 48 | 0,025 | 15,40 |
| 1678 | 8,0 – **10 t** | 48 | 0,029 | 26,90 |
| 1680 | **15 t** | 71 | 0,100 | 37,80 |
| 1682 | 15,0 - **20 t** | 71 | 0,115 | 44,20 |
| 1683 | **32 t** | 88 | 0,134 | 54,20 |

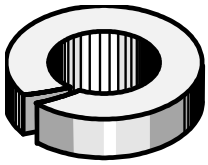

### *BGW*-steel pocket former with anchor-fixing socket for screwing on the formwork
### *BGW*-Aussparungskörper aus Stahl mit Ankerfixierhülse zum Anschrauben an Schalung

| art.-no | load | ∅ mm | concrete cover | €/piece |
|---|---|---|---|---|
| 1660 | 1,0 – 1,3 t | 60 | 10 mm | 72,00 |
| 1661 | 2,0 – 2,5 t | 74 | 11 mm | 101,60 |
| 1662 | 4,0 t | 94 | 15 mm | 132,35 |
| 1663 | 5,0 t | 94 | 15 mm | 132,35 |
| 1664 | 7,5 t | 118 | 15 mm | 159,10 |
| 1665 | 10,0 t | 118 | 15 mm | 159,10 |
| 1666 | 15,0 t | 160 | 15 mm | 219,45 |
| 1667 | 20,0 t | 160 | 15 mm | 219,45 |
| 1668 | 32,0 t | 214 | 27 mm | on demand |

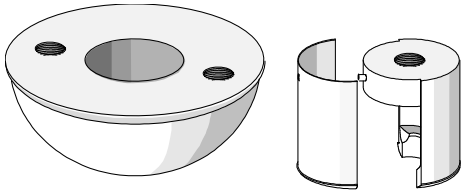

# *BGW*-Capstan lifter – Double headed anchor – supply 07/18(01/18)

**_BGW_-Doppelkugelkopfanker - Zubehör**

For attaching to the steel formwork

***The Round Pocket Former serves to fix the double-headed anchor, but it should be noted that when used without rubber sleeve, the bore in the recess body must be filling.***

## *BGW*-Round Steel Pocket Former

**_BGW_-Aussparungskörper eirund, aus Stahl**

Easy installation on the formwork with M12 thread.

| art.-no | load | outer-Ø d mm | concrete cover | drilling-Ø b mm | €/piece |
|---|---|---|---|---|---|
| 1651-2 | 1,0 – **1,3 t** | 60 | 10 mm | 19 | 37,70 |
| 1652-2 | 2,0 - **2,5 t** | 74 | 11 mm | 26 | 40,30 |
| 1654-2 | 4,0 - **5,0 t** | 94 | 15 mm | 36 | 78,00 |

## *BGW*- Round Poyurethan Pocket Former

**_BGW_-Aussparungskörper eirund, aus Polyurethan**

Easy installation on the formwork with M12 thread.

| art.-no | load | outer-Ø d mm | concrete cover | drilling-Ø b mm | €/piece |
|---|---|---|---|---|---|
| 1651-2PU | 1,0 – **1,3 t** | 60 | 10 mm | 19 | 37,70 |
| 1652-2PU | 2,0 - **2,5 t** | 74 | 11 mm | 26 | 40,30 |
| 1654-2PU | 4,0 - **5,0 t** | 94 | 15 mm | 36 | 78,00 |

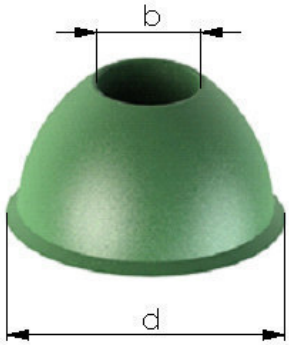


## *BGW*-Round Steel Pocket Former, magnetic.

**_BGW_- Aussparungskörper eirund, aus Stahl, magnetisch.**

Easy installation on the formwork, magnetic

| art.-no | load | outer-Ø d mm | concrete cover | drilling-Ø b mm | €/piece |
|---|---|---|---|---|---|
| 1651-2M | 1,0 – **1,3 t** | 60 | 10 mm | 19 | 75,40 |
| 1652-2M | 2,0 - **2,5 t** | 74 | 11 mm | 26 | 80,60 |
| 1654-2M | 4,0 - **5,0 t** | 94 | 15 mm | 36 | 117,00 |

## *BGW*-Round Polyurethan Pocket Former, magnetic

**_BGW_- Aussparungskörper eirund, aus Polyurethan magnetisch.**

Easy installation on the formwork, magnetic

| art.-no | load | outer-Ø d mm | concrete cover | drilling-Ø b mm | €/piece |
|---|---|---|---|---|---|
| 1651-1PUM | 1,0 – **1,3 t** | 60 | 10 mm | 20 | 75,40 |
| 1652-1PUM | 2,0 - **2,5 t** | 74 | 11 mm | 27 | 80,60 |
| 1653-1PUM | 2,0 - **2,5t** | 74 | 11 mm | 30 | 80,60 |
| 1654-1PUM | 4,0 - **5,0 t** | 94 | 15 mm | 37 | 117,00 |
| 1664-1PUM | 7,5 t -**10,0 t** | 118 | 15 mm | 48 | 146,90 |

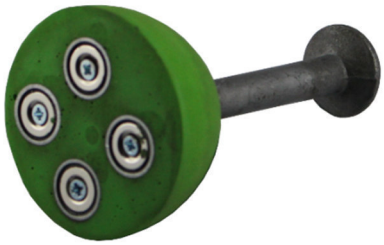

| art.-no | load | outer-Ø d mm | concrete cover | drilling-Ø b mm | €/piece |
|---|---|---|---|---|---|
| 1651-2PUM | 1,0 – **1,3 t** | 60 | 10 mm | 19 | 75,40 |
| 1652-2PUM | 2,0 - **2,5 t** | 74 | 11 mm | 26 | 80,60 |
| 1654-2PUM | 4,0 - **5,0 t** | 94 | 15 mm | 36 | 117,00 |

# *BGW*-capstan lifter - Supply *BGW*-Kugelkopfanker-Zubehör 07/18 (01/18)

For attaching to the steel formwork

***The Round Pocket Former is mounted with the ball anchor.***
***For mounting a rubbersleeve is necessary.***

## *BGW*-Round Steel Pocket Former

***BGW*-Aussparungskörper eirund, aus Stahl**

Easy installation on the formwork with M12 thread
Einfache Montage an der Schalung mit M12 Gewinde

| art.-no | load | outer-Ø d mm | concrete cover | drilling-Ø b mm | €/piece |
|---|---|---|---|---|---|
| 1651-1 | 1,0 – **1,3 t** | 60 | 10 mm | 20 | 37,70 |
| 1652-1 | 2,0 - **2,5 t** | 74 | 11 mm | 27 | 40,30 |
| 1653-1 | 2,0 - **2,5t** | 74 | 11 mm | 30 | 40,30 |
| 1654-1 | 4,0 - **5,0 t** | 94 | 15 mm | 37 | 78,00 |
| 1664-1 | 7,5 t – **10,0 t** | 118 | 15 mm | 48 | 107,90 |

## *BGW*- Round Poyurethan Pocket Former

***BGW*-Aussparungskörper eirund, aus Polyurethan**

Easy installation on the formwork with M12 thread
Einfache Montage an der Schalung mit M12 Gewinde

| art.-no | load | outer-Ø d mm | concrete cover | drilling-Ø b mm | €/piece |
|---|---|---|---|---|---|
| 1651-1PU | 1,0 – **1,3 t** | 60 | 10 mm | 20 | 37,70 |
| 1652-1PU | 2,0 - **2,5 t** | 74 | 11 mm | 27 | 40,30 |
| 1653-1PU | 2,0 - **2,5t** | 74 | 11 mm | 30 | 40,30 |
| 1654-1PU | 4,0 - **5,0 t** | 94 | 15 mm | 37 | 78,00 |
| 1664-1PU | 7,5 t – **10,0 t** | 118 | 15 mm | 48 | 107,90 |

## *BGW*-Round Steel Pocket Former, magnetic.

***BGW*- Aussparungskörper eirund, aus Stahl, magnetisch.**

Easy installation on the formwork, magnetic
Einfache Montage an der Schalung, magnetisch

| art.-no | load | outer-Ø d mm | concrete cover | drilling-Ø b mm | €/piece |
|---|---|---|---|---|---|
| 1651-1M | 1,0 – **1,3 t** | 60 | 10 mm | 20 | 75,40 |
| 1652-1M | 2,0 - **2,5 t** | 74 | 11 mm | 27 | 80,60 |
| 1653-1M | 2,0 - **2,5t** | 74 | 11 mm | 30 | 80,60 |
| 1654-1M | 4,0 - **5,0 t** | 94 | 15 mm | 37 | 117,00 |
| 1664-1M | 7,5 t – **10,0 t** | 118 | 15 mm | 48 | 146,90 |

## *BGW*-Round Polyurethan Pocket Former, magnetic

***BGW*- Aussparungskörper eirund, aus Polyurethan magnetisch.**

Easy installation on the formwork, magnetic
Einfache Montage an der Schalung, magnetisch

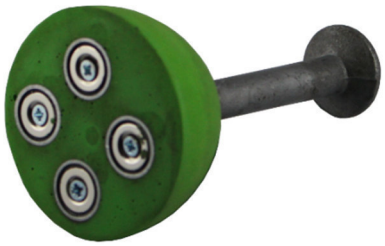

| art.-no | load | outer-Ø d mm | concrete cover | drilling-Ø b mm | €/piece |
|---|---|---|---|---|---|
| 1651-1PUM | 1,0 – **1,3 t** | 60 | 10 mm | 20 | 75,40 |
| 1652-1PUM | 2,0 - **2,5 t** | 74 | 11 mm | 27 | 80,60 |
| 1653-1PUM | 2,0 - **2,5t** | 74 | 11 mm | 30 | 80,60 |
| 1654-1PUM | 4,0 - **5,0 t** | 94 | 15 mm | 37 | 117,00 |
| 1664-1PUM | 7,5 t -**10,0 t** | 118 | 15 mm | 48 | 146,90 |

## *BGW*-Rubbersleeve for Round Steel Pocket Former

***BGW*- Gummimanschette für Aussparungskörper**

| art.-no | load | outer Ø | weight kg | €/piece |
|---|---|---|---|---|
| 1670 | 1,0 – **1,3 t** | 20 | 0,005 | 1,10 |
| 1679 | 2,0 – 2,5 t | 25 | 0,006 | 1,50 |
| 1672 | 2,0 – **2,5 t** | 27 | 0,006 | 1,60 |
| 1673 | 2,0 – **2,5 t** | 30 | 0,010 | 1,75 |
| 1674 | 4,0 – **5,0 t** | 37 | 0,016 | 2,40 |
| 1675 | 4,0 – 5,0t | 38 | 0,017 | 2,45 |
| 1676 | **7,5 t** | 48 | 0,025 | 15,40 |
| 1678 | 8,0 – **10 t** | 48 | 0,029 | 26,90 |
| 1680 | **15 t** | 70 | 0,100 | 37,80 |
| 1682 | 15,0 - **20 t** | 70 | 0,115 | 44,20 |
| 1683 | **32 t** | 88 | 0,134 | 54,20 |

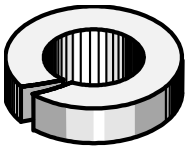

# *BGW*-Capstan lifter - Supply *BGW*-Kugelkopfanker-Zubehör 07/18(01/18)

To attach to the wooden formwork

### *BGW*-Holding plate.

BGW-Holding plate is used to attach BGW-Round Pocket Former to wooden formwork. For this, the BGW-Holding plate is secured to the wooden formwork, e.g. with nails. Subsequently, the Pocket Former is placed together with fixing nut and capstan lifter on the centering pins of the BGW-Holding plate. The centering pins keep the Pocket Former closed and fix it to the formwork

| art.-no | load | ∅ mm | €/piece |
|---|---|---|---|
| 1600-1 | 1,3 | 62 | 6,63 |
| 1602-1 | 2,5 | 77 | 7,05 |
| 1604-1 | 4-5 | 96 | 7,20 |
| 1608-1 | 7,5-10 | 122 | 8,28 |
| 1610-1 | 15-20 | 162 | 9,60 |
| 1612-1 | 32 | 222 | 11,25 |

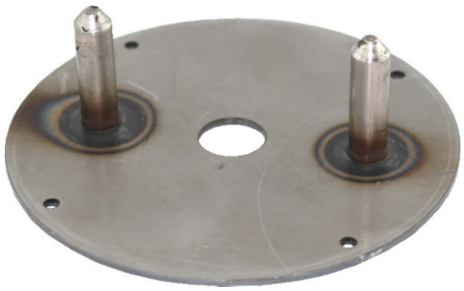

### *BGW*-Round Rubber Pocket Former, divided

for fixing capstan lifters

| art.-no | load | ∅ mm | concrete cover | packaging unit piece | weight kg/packaging unit piece | €/piece |
|---|---|---|---|---|---|---|
| 1600 | 1,0 – **1,3 t** | 60 | 10 mm | 20 | 1,20 | 5,07 |
| 1602 | 2,0 – **2,5 t** | 74 | 11 mm | 10 | 1,00 | 7,09 |
| 1604 | 4,0 – **5,0 t** | 94 | 15 mm | 10 | 3,00 | 10,47 |
| 1606 | **7,5 t** | 118 | 15 mm | 10 | 4,60 | 15,02 |
| 1608 | 8,0 – **10 t** | 118 | 15 mm | 10 | 4,30 | 15,02 |
| 1610 | 15 – **20 t** | 160 | 15 mm | 2 | 2,10 | 32,66 |
| 1612 | **32 t** | 214 | 27 mm | 2 | 5,40 | 49,86 |

### *BGW*-Holding plate with handle

BGW-Holding plate with handle allows the Pocket Former together with the capstan lifter, to be pressed directly into the fresh concrete. The centering pins hold the Pocket Former closed and fix the anchor in the recess body.

| art.-no | load | ∅ mm | weight kg | €/piece |
|---|---|---|---|---|
| 1600-2 | 1,3 | 100 | 0,185 | 10,63 |
| 1602-2 | 2,5 | 114 | 0,225 | 11,05 |
| 1604-2 | 4-5 | 144 | 0,305 | 11,20 |
| 1608-2 | 7,5-10 | 178 | 0,460 | 12,28 |
| 1610-2 | 15-20 | 240 | 0,825 | 13,60 |
| 1612-2 | 32 | 314 | 1,350 | 15,25 |

load 1,3t-2,5t

load 4t-32t

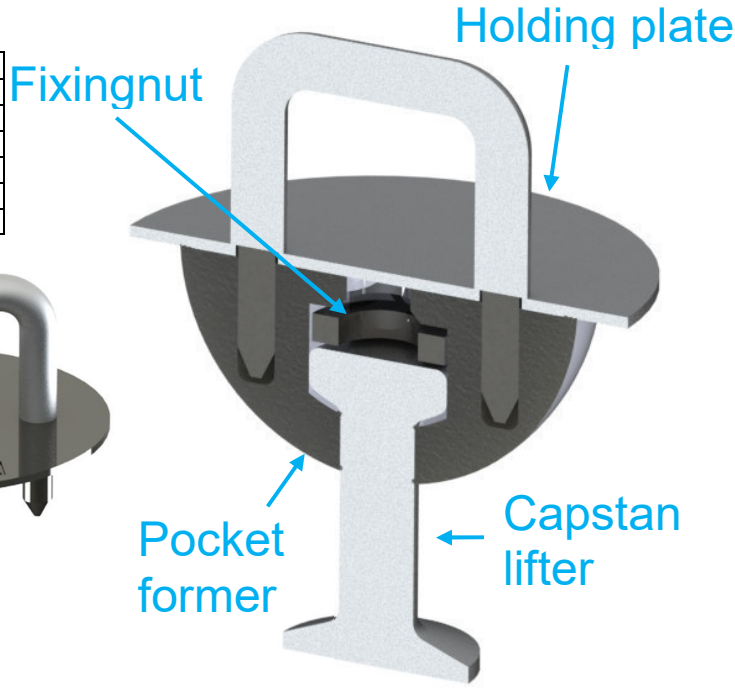

# *BGW*-Steel Pocket Former – Trumpet shaped

07/18(03/07)

## for *BGW*-Capstan Lifters - load 2,5 t

***BGW*-Aussparungskörper aus Stahl - Trompetenförmig**

### *BGW*-Steel Pocket Former – Trumpet shaped

| art.-no. | construction | Ø shank inside/mm | thread | price €/piece |
|---|---|---|---|---|
| 1653 | trumpet shaped | 30 | M 12 | on demand |
| 16530 | round | 27 | M 12 | |

trumpet shaped

round

### *BGW*-Steel Pocket Former – Trumpet shaped with inboard magnet

The Capstan Lifter will be fixed with 1 inboard magnet in the Pocket Former

| art.-no. | construction | Ø shank inside/mm | thread | adhesive force kg | price €/piece |
|---|---|---|---|---|---|
| 1653-M | trumpet shaped | 30 | M 12 | 170 | on demand |
| 16531 | round | 27 | M 12 | 170 | |

### *BGW*-Magnetic Clamp type HM5 – Trumpet shaped also with inboard magnet

This magnetic system is specially for attaching Capstan Lifters to form work out of steel.
The utilized neodymium magnets have a very huge adhesive force even on little space, in comparison with the up to now known magnets. Upgrate of the magnets is possible.

| art.-no. | construction | inboarding magnet | out laying magnet | adhesive force kp | □ outside | price €/piece |
|---|---|---|---|---|---|---|
| HM5-3-2,5-1653 | trumpet shaped | without | 3 pieces | 50 | 74 | on demand |
| HM5-3-2,5-1653-M | trumpet shaped | with | 3 pieces | 50 | 74 | |
| HM5-3-2,5-16530 | round | without | 3 pieces | 50 | 74 | |
| HM5-3-2,5-16531 | round | with | 3 pieces | 50 | 74 | |
| HM5-6-2,5-1653 | trumpet shaped | without | 6 pieces | 100 | 74 | |
| HM5-6-2,5-1653-M | trumpet shaped | with | 6 pieces | 100 | 74 | |
| HM5-6-2,5-16530 | round | without | 6 pieces | 100 | 74 | |
| HM5-6-2,5-16531 | round | with | 6 pieces | 100 | 74 | |

with 6 magnets

with 3 magnets

# Supply

Capstan lifter with Rubbersleeve

### *BGW*-Rubbersleeve for Steel Pocket Former 2,5 t

| art.-no. | load t | Ø/mm | €/piece |
|---|---|---|---|
| 1672 | 2,0 – 2,5 t | 27 | 1,60 |
| 1673 | 2,0 – 2,5 t | 30 | 1,60 |

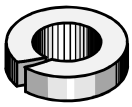

# *BGW*-capstan lifter – Supply

03/18(03/18)

***BGW*-Kugelkopfanker-Zubehör**

**BGW-Steel Pocket Former, spreadable**

*BGW*-Steel Pocket Former, spreadable consists of steel and is used to fix capstan lifter to the steel formwork. The pocket former is split in the middle so that it can be opened to receive a *BGW*-capstan lifter. In order to fix the anchor in the desired position, the anchor in the pocket former must be closed and the recess body screwed to the formwork with the fastening thread. Now, moving capstan lifter during concreting is virtually eliminated, despite concrete falling on the capstan lifter. Another advantage of this pocket former over all the others is in the absolute lock security.

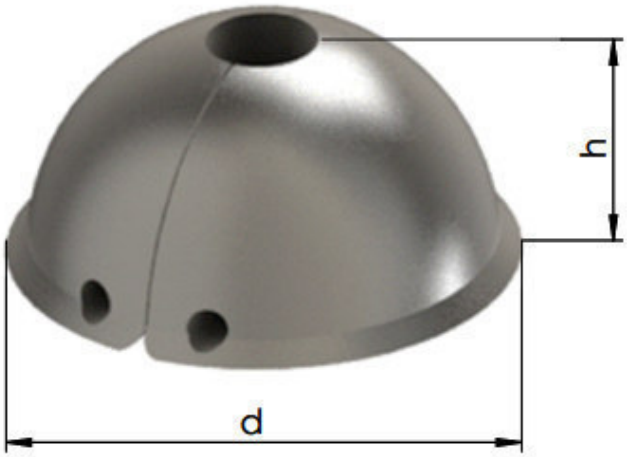


The greasing of the surfaces that come in contact with concrete, allows problem-free removal of the pocket former. This particularly applies to thread and hinge pins. The greasing of the pocket former should be done before each use.

***Advantages:***

- Positional security of capstan lifter
- Lock security

**BGW-Steel Pocket Former, spreadable**

| art.-no. | load t | outer Ø d (mm) | height h (mm) | concrete cover (mm) | weight kg/piece | price €/price |
|---|---|---|---|---|---|---|
| 16502 | 1,3 | 66 | 29 | 10 | 0,4 | 340,- |
| 16522 | 2,5 | 82 | 36 | 11 | 0,7 | 540,- |
| 16542 | 5 | 104 | 46 | 15 | 1,6 | 760,- |
| 16562 | 10 | 128 | 57 | 15 | 2,8 | 940,- |
| 16582 | 20 | 170 | 72 | 15 | 7,0 | 1140,- |
| 16592 | 32 | 224 | 102 | 27 | 17 | 1300,- |

# BGW-Capstan Lifting Shackle

07/18(07/18)

BGW-Capstan Lifting Shackle is a manual operated coupler of different load levels, compatible to those of the BGW-Capstan Lifting Inserts.

The BGW-Capstan Lifting Shackle is coupled to a corresponding BGW-Capstan Lifting insert. Even under load, movement is possible and completely safe. This makes the possibility of lifting pre cast concrete units of most kinds easy and simple.

**Installation and usage instructions:**
*http://www.bgw-bohr.de/pdf/Verwendungsanleitung_KKA-Abheber_10-2018.pdf*

**EU/EC declaration of conformity:**
*http://www.bgw-bohr.de/pdf/CE-Erkl%E4rung_BGW-Kugelkopfabheber_alle%20Laststufen.pdf*

## BGW-Capstan Lifting Shackle with chain link

| art.-no. | load [t] | height h [mm] | weight kg/piece | price €/piece |
|---|---|---|---|---|
| 1510 | 1,0 - **1,3** | 157 | 0,70 | 73,60 |
| 1512 | 1,5 - **2,5** | 165 | 1,17 | 81,80 |
| 1514 | 3,0 - **5,0** | 244 | 3,08 | 122,70 |
| 1516 | 6,0 - **10,0** | 309 | 5,90 | 204,50 |
| 1518 | 12,0 - **20,0** | 438 | 18,50 | 368,10 |
| 1522 | **32,0** | 528 | 39,00 | 781,20 |

## BGW-Capstan Lifting Shackle with rope

| art.-no. | load [t] | height h [mm] | rope-Ø [mm] | weight kg/piece | price €/piece |
|---|---|---|---|---|---|
| 1510S | 1,0 - **1,3** | ca. 310 | 8 | 1,32 | 73,60 |
| 1512S | 1,5 - **2,5** | ca. 520 | 14 | 1,63 | 81,80 |
| 1514S | 3,0 - **5,0** | ca. 560 | 18 | 3,52 | 122,70 |
| 1516S | 6,0 - **10,0** | ca. 720 | 22 | 6,52 | 204,50 |
| 1518S | 12,0 - **20,0** | ca. 1200 | 28 | 17,8 | 480,00 |

***BGW*-Lifting gadgets** (see other page)

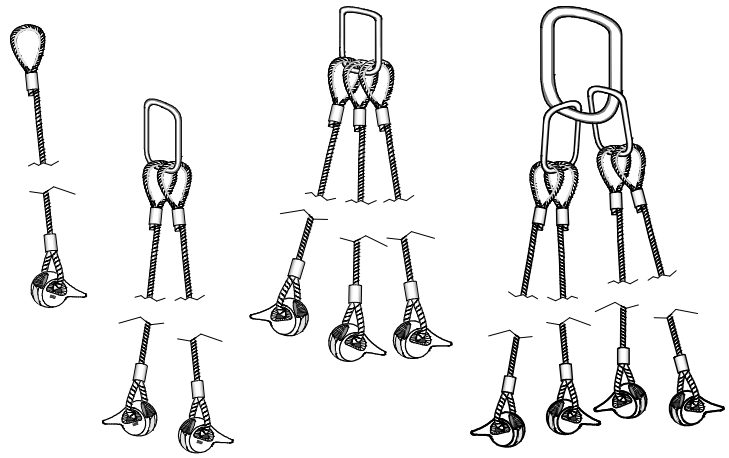

***New: See our products in action –*** *on our YouTube channel https://goo.gl/drupBz*

# BGW-Lifting Gadgets

09/98(05/01)

Suitable for the use of the BGW-Lifting Gadget is the installation of BGW-Capstan Lifters.

Prerequisite for the save work of the BGW-Lifting Gadget is the correct anchor installation. This is ensured by the use of BGW-Pocket Formers, as well as the keeping of the correct anchor depth.

*The BGW-Lifting Gadgets is a model of the BGW-Lifting Shackle..*

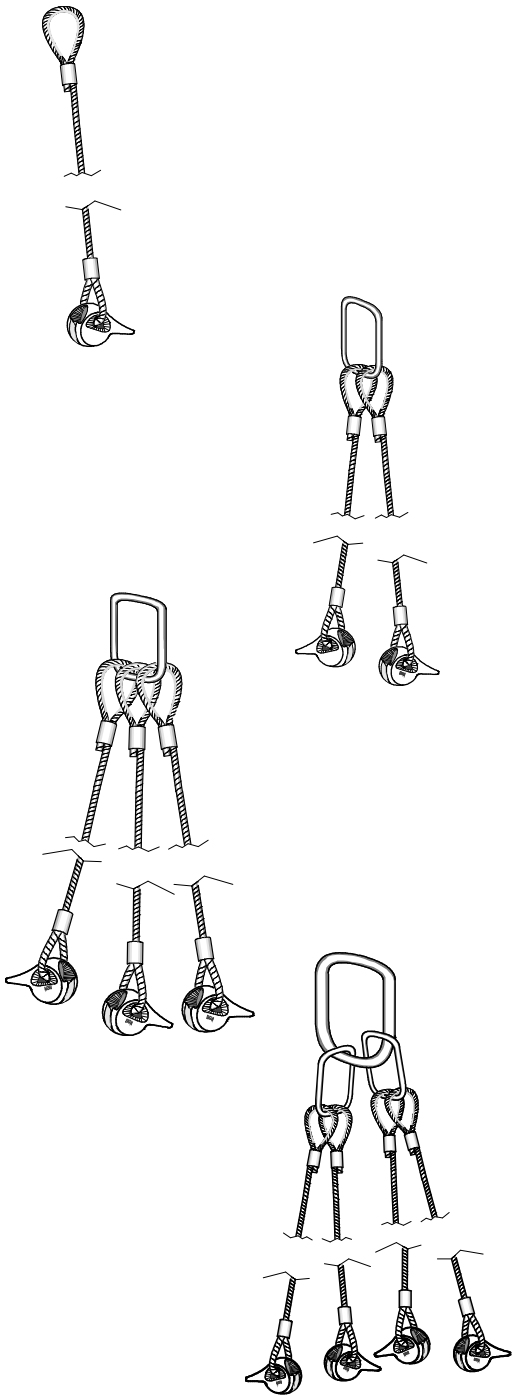

### 1-Rope-Gadget

| art.-no. | load t | rope Ø | €/piece |
|---|---|---|---|
| 15301 | 1,3 | 10 | 92,03 |
| 15311 | 2,5 | 12 | 112,48 |
| 15321 | 5,0 | 16 | 199,40 |
| 15331 | 10,0 | 24 | 245,42 |

### 2-Rope-Gadget

| art.-no. | load t | rope Ø | €/piece |
|---|---|---|---|
| 15302 | 1,3 | 10 | 194,29 |
| 15312 | 2,5 | 12 | 224,97 |
| 15322 | 5,0 | 16 | 398,81 |
| 15332 | 10,0 | 24 | 490,84 |

### 3-Rope Gadget

| art.-no. | load t | rope Ø | €/piece |
|---|---|---|---|
| 15303 | 1,3 | 10 | 276,10 |
| 15313 | 2,5 | 12 | 337,45 |
| 15323 | 5,0 | 16 | 598,21 |
| 15333 | 10,0 | 24 | 736,26 |

### 4-Rope-Gadget

| art.-no. | load t | rope Ø | €/piece |
|---|---|---|---|
| 15304 | 1,3 | 10 | 368,13 |
| 15314 | 2,5 | 12 | 449,94 |
| 15324 | 5,0 | 16 | 797,62 |
| 15334 | 10,0 | 24 | 981,68 |

**Design changes reserved**

The prices are for a rope length of 1,5m, zinc rope DIN 3060 SE – 1700mm² or on arrangement.
Other lengths or designs for your special fabrication need you get on demand.

# *BGW*-Rotary and Transport Coupling



A manually operated coupling in different load stage versions, which correspond to those of the ***BGW*-Capstan Lifters.**

The ***BGW*-Rotary and Transport Coupling** is specially designed for transporting precast concrete parts, in particular pipes, up to 32 t.

With it all movements can be carried out easily: turning, lifting, loading and laying.

The ***BGW*-Rotary and Transport Coupling** is flanged to a cast-in ***BGW*-Capstan Lifter** of the same load stage and is supported in the recess formed by the ***BGW*-Pocket Former**.

For a system-appropriate use, two couplings are needed, which were specially matched to each other. The two individual couplings are connected to each other by means of a crossbar.

Upon request, the ***BGW*-Rotary and Transport Couplings** are delivered with the rope attached. The two associated couplings are exactly matched.

***BGW*-Rotary and Transport Coupling** is marked with the following information: BGW marking, CE marking, load level, year of construction and machine number.

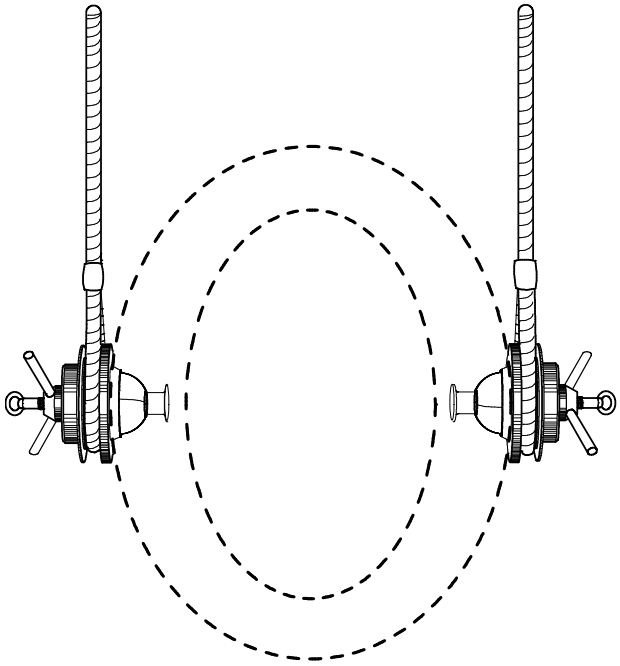

| art.-no. | load t | price €/piece |
|---|---|---|
| 1524 | 5,0 | 3.383,72 |
| 1523 | 10,0 | 3.660,84 |
| 1520 | 20,0 | 4.299,96 |
| 1521 | 32,0 | 4.689,56 |

The prices exclusive rope.

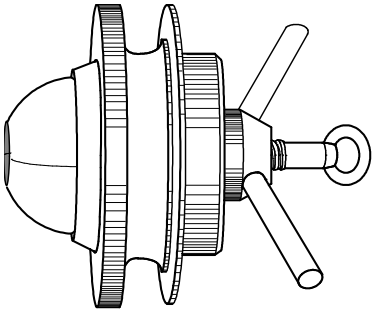

# *BGW*-Rotary and Transport Couplers – variant

05/16

If you order *BGW*-Rotary and Transport Couplers please give the variant and the length of the rope you need on your order.

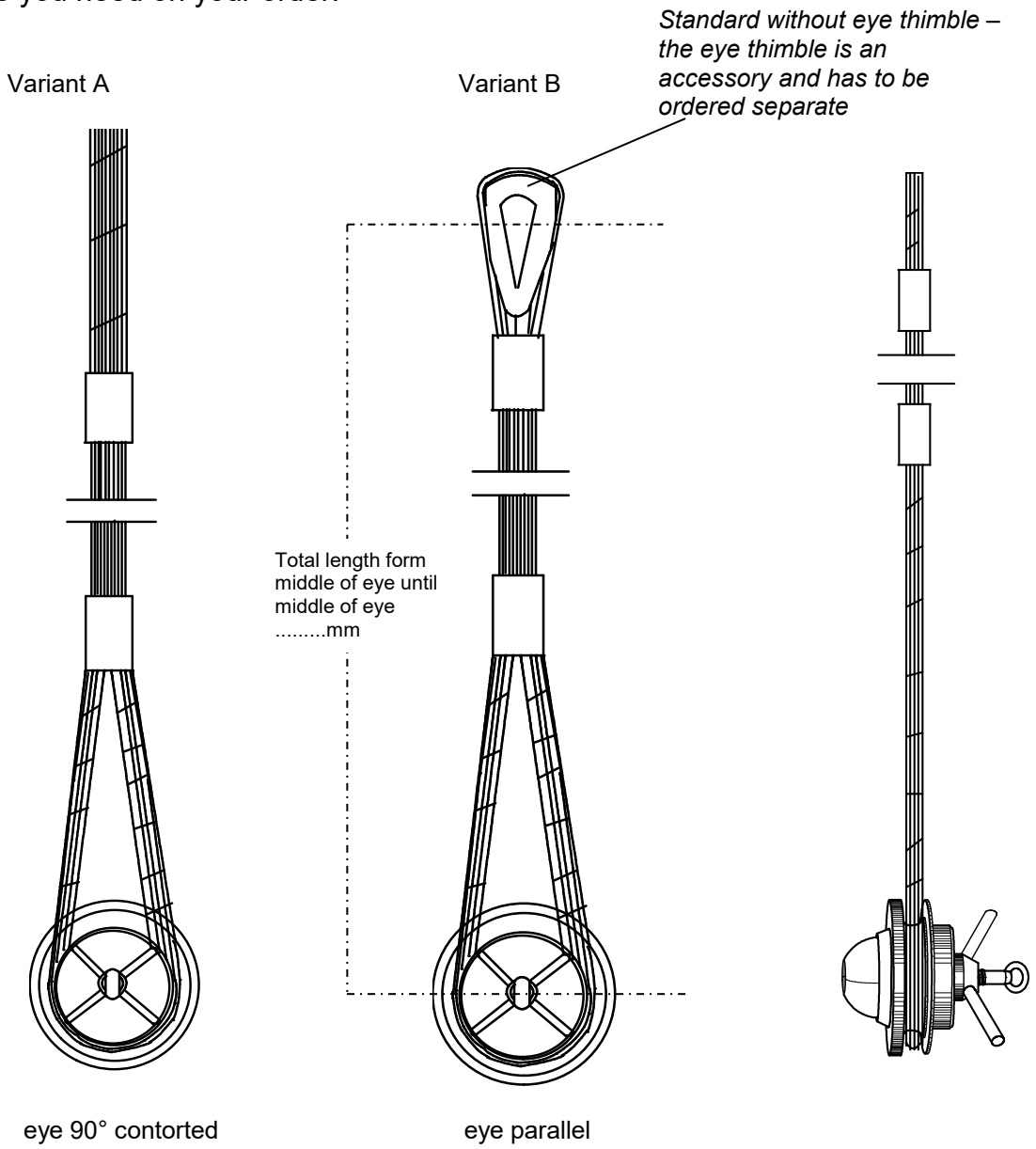


| art.-no. rope | load t | Ø rope | length rope mm | piece kg | price €/piece |
|---|---|---|---|---|---|
| 1528-A | 5 t | 18 mm | 2000 | 4,00 | 300,00 |
| 1528-B | 5 t | 18 mm | 2000 | 4,00 | 300,00 |
| 1527-A | 10 t | 26 mm | 2500 | 10,00 | 600,00 |
| 1527-B | 10 t | 26 mm | 2500 | 10,00 | 600,00 |
| 1526-A | 20 t | 34 mm | 3000 | 18,00 | 800,00 |
| 1526-B | 20 t | 34 mm | 3000 | 18,00 | 800,00 |
| 1525-A | 32 t | 40 mm | 3000 | 25,00 | 1100,00 |
| 1525-B | 32 t | 40 mm | 3000 | 25,00 | 1100,00 |

# BGW-Installation Instruction for Turn- and Transportation Couplers

03/11(03/11)

To facilitate the use of the Turn- and Transportation Couplers, two Capstan Lifters must be placed on a rotation axis located at the precast elements centre of gravity.

A requirement for the safe use of the turn- and Transportation Couplers is the specified anchor installation and the use of the correct anchors and formers. For example the 32T Turn Coupler should be used with the BGW-round Pocket Former Ø 214mm at an installation depth of 27mm. Failure to use the recommended anchor for the coupler group can lead to fracture as the turn coupler cannot be properly closed.

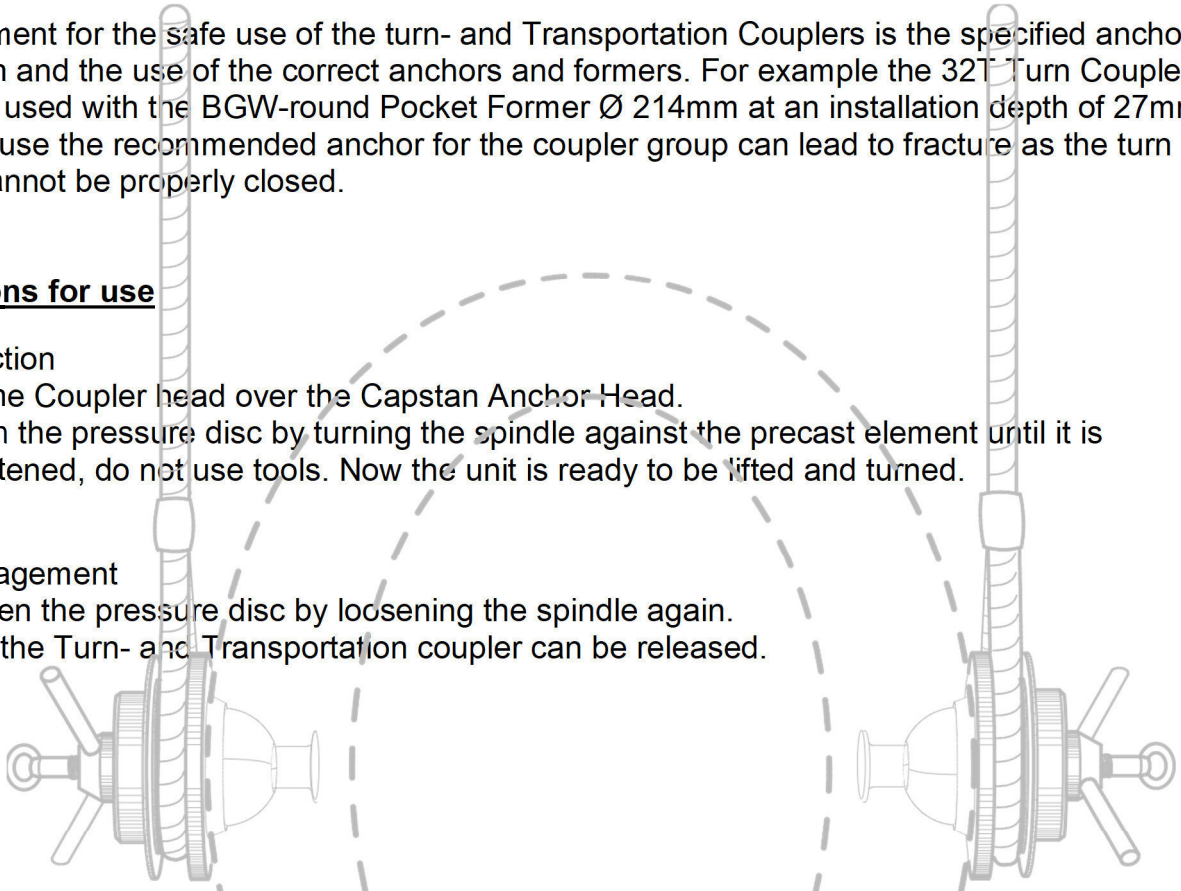

## Instructions for use

a) Connection

1. Fit the Coupler head over the Capstan Anchor Head.
2. Push the pressure disc by turning the spindle against the precast element until it is tightened, do not use tools. Now the unit is ready to be lifted and turned.

.

b) Disengagement

1. Loosen the pressure disc by loosening the spindle again.
2. Now the Turn- and Transportation coupler can be released.

## Operation Instructions

During coupling please ensure the spindle is turned as tight as possible around the anchor head. The Pressure dis should be tightly pressed against the concrete, for pipes it is sufficient that the pressure disc lies just against the crown of the pipe bend.

Always ensure that the coupler head is free from foreign particles and clean before use, failure to do this may result in the coupler not closing properly. The coupler must be greased at regular intervals to ensure the satisfactory working of moving parts.

# BGW-Sleeve Anchor for Sandwich Pannels



**Approval for BGW sandwich panel anchor SPA:**
http://www.bgw-bohr.de/pdf/Zulassungen/Zulassung-Mauerkettenanker_Flachanker_2019.pdf

*Other dimensions are available upon special request*

material: stainless steel 1.4571
sheet metal strength: 1,5 mm

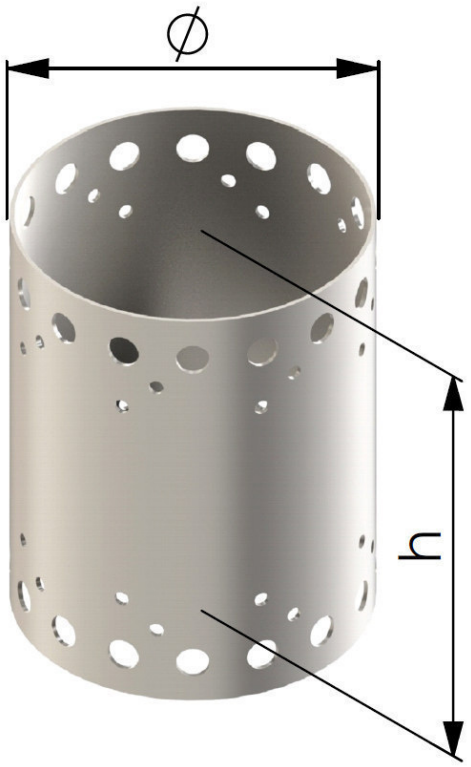


| art.-no. | Ø mm | h mm | weight kg/pcs | price €/pcs |
|---|---|---|---|---|
| 2001 | 51 | 150 | 0,288 | 6,45 |
| 2003 | 76 | 150 | 0,432 | 8,30 |
| 2078 | 102 | 150 | 0,576 | 9,90 |
| 2005 | 127 | 150 | 0,720 | 12,75 |
| 2009 | 153 | 150 | 0,864 | 14,50 |
| 2083 | 178 | 150 | 1,008 | 16,55 |
| 2013 | 204 | 150 | 1,152 | 18,52 |
| 2015 | 229 | 150 | 1,296 | 20,36 |
| 2017 | 255 | 150 | 1,440 | 22,32 |
| 2019 | 280 | 150 | 1,584 | 24,06 |
| 2000 | 51 | 175 | 0,336 | 7,85 |
| 2002 | 76 | 175 | 0,504 | 10,10 |
| 2004 | 102 | 175 | 0,672 | 12,35 |
| 2006 | 127 | 175 | 0,840 | 14,80 |
| 2008 | 153 | 175 | 1,008 | 16,95 |
| 2010 | 178 | 175 | 1,176 | 19,35 |
| 2012 | 204 | 175 | 1,344 | 21,65 |
| 2014 | 229 | 175 | 1,512 | 23,80 |
| 2016 | 255 | 175 | 1,680 | 26,10 |
| 2018 | 280 | 175 | 1,848 | 28,10 |
| 2020 | 51 | 200 | 0,384 | 9,25 |
| 2022 | 76 | 200 | 0,576 | 12,35 |
| 2024 | 102 | 200 | 0,768 | 15,25 |
| 2026 | 127 | 200 | 0,960 | 18,30 |
| 2028 | 153 | 200 | 1,152 | 21,25 |
| 2030 | 178 | 200 | 1,344 | 24,15 |
| 2032 | 204 | 200 | 1,536 | 26,70 |
| 2034 | 229 | 200 | 1,728 | 29,60 |
| 2036 | 255 | 200 | 1,920 | 32,60 |
| 2038 | 280 | 200 | 2,112 | 35,10 |
| 2040 | 51 | 225 | 0,432 | 9,60 |
| 2042 | 76 | 225 | 0,648 | 12,65 |
| 2044 | 102 | 225 | 0,864 | 15,60 |
| 2046 | 127 | 225 | 1,080 | 18,75 |
| 2048 | 153 | 225 | 1,296 | 21,65 |
| 2050 | 178 | 225 | 1,512 | 33,35 |
| 2052 | 204 | 225 | 1,728 | 37,15 |
| 2054 | 229 | 225 | 1,944 | 41,30 |
| 2056 | 255 | 225 | 2,160 | 45,50 |
| 2058 | 280 | 225 | 2,376 | 49,00 |
| 2065 | 51 | 250 | 0,472 | 10,40 |
| 2067 | 76 | 250 | 0,708 | 13,68 |
| 2063 | 102 | 250 | 0,944 | 16,80 |
| 2069 | 127 | 250 | 1,180 | 20,25 |
| 2071 | 153 | 250 | 1,416 | 23,40 |
| 2073 | 178 | 250 | 1,652 | 36,00 |
| 2075 | 204 | 250 | 1,888 | 40,00 |
| 2077 | 229 | 250 | 2,124 | 44,50 |
| 2007 | 255 | 250 | 2,360 | 48,90 |
| 2011 | 280 | 250 | 2,596 | 52,70 |
| 2064 | 51 | 260 | 0,500 | 11,15 |
| 2066 | 76 | 260 | 0,750 | 14,70 |
| 2060 | 102 | 260 | 1,000 | 18,05 |
| 2068 | 127 | 260 | 1,250 | 21,70 |
| 2070 | 153 | 260 | 1,500 | 25,10 |
| 2061 | 178 | 260 | 1,750 | 38,65 |
| 2062 | 204 | 260 | 2,000 | 42,85 |
| 2072 | 229 | 260 | 2,250 | 47,60 |
| 2074 | 255 | 260 | 2,500 | 52,35 |
| 2076 | 280 | 260 | 2,750 | 56,45 |

| art.-no. | Ø mm | h mm | weight kg/pcs | price €/piece |
|---|---|---|---|---|
| 2021 | 102 | 280 | 1,075 | 26,88 |
| 2023 | 127 | 280 | 1,340 | 33,50 |
| 2025 | 153 | 280 | 1,614 | 40,35 |
| 2027 | 178 | 280 | 1,880 | 47,00 |
| 2029 | 204 | 280 | 2,152 | 53,80 |
| 2031 | 229 | 280 | 2,416 | 60,40 |
| 2033 | 255 | 280 | 2,690 | 67,25 |
| 2035 | 280 | 280 | 2,954 | 73,85 |
| 2064-300 | 51 | 300 | 0,566 | 14,15 |
| 2079 | 76 | 300 | 0,853 | 21,33 |
| 2086 | 102 | 300 | 1,131 | 28,28 |
| 2081 | 127 | 300 | 1,409 | 35,23 |
| 2087 | 153 | 300 | 1,416 | 35,40 |
| 2088 | 178 | 300 | 1,848 | 46,20 |
| 2037 | 204 | 300 | 2,306 | 57,65 |
| 2085 | 229 | 300 | 2,380 | 59,50 |
| 2059 | 255 | 300 | 2,890 | 72,25 |
| 2039 | 280 | 300 | 3,165 | 79,13 |
| 2051 | 204 | 320 | 2,412 | 60,30 |
| 2053 | 229 | 320 | 2,710 | 67,75 |
| 2074-3 | 255 | 320 | 3,017 | 75,43 |
| 2055 | 280 | 320 | 3,313 | 82,83 |
| 2041 | 153 | 330 | 1,902 | 47,55 |
| 2043 | 178 | 330 | 2,213 | 55,33 |
| 2045 | 204 | 330 | 2,536 | 63,40 |
| 2047 | 229 | 330 | 2,847 | 71,18 |
| 2074-1 | 255 | 330 | 3,108 | 77,70 |
| 2049 | 280 | 330 | 3,482 | 87,05 |
| 2057 | 204 | 340 | 2,564 | 64,10 |
| 20571 | 229 | 340 | 2,879 | 71,98 |
| 20071 | 255 | 340 | 3,210 | 80,25 |
| 20351 | 280 | 340 | 3,520 | 88,00 |
| 20291 | 204 | 360 | 2,715 | 67,88 |
| 20311 | 229 | 360 | 3,048 | 76,20 |
| 20331 | 255 | 360 | 3,394 | 84,85 |
| 20391 | 280 | 360 | 3,727 | 93,18 |

# BGW-Flat Anchor for Sandwich Pannels

(03/11)(02/07)

for sewing sandwich panels

**Approval for BGW-flat-anchor SPA:**

*http://www.bgw-bohr.de/pdf/Zulassungen/Zulassung-Massivbetonanker_Flachanker_2019.pdf*

*Other dimensions are available upon special request.*

**Material: stainless steel 1.4571**

**sheet metal strength: 1,5 mm**

| Art.-Nr. 1,5 mm | Breite mm | Höhe mm | Gewicht /kg 1,5 mm | €/Stück 1,5 mm |
|---|---|---|---|---|
| 2105 | 40 | 150 | 0,071 | 1,50 |
| 2158 | 80 | 150 | 0,141 | 2,45 |
| 2160 | 120 | 150 | 0,212 | 3,60 |
| 2164 | 160 | 150 | 0,283 | 4,60 |
| 2107 | 200 | 150 | 0,353 | 5,70 |
| 21070 | 240 | 150 | 0,424 | 6,75 |
| 2163 | 280 | 150 | 0,495 | 7,95 |
| 2109 | 320 | 150 | 0,565 | 9,00 |
| 2111 | 360 | 150 | 0,636 | 10,10 |
| 2113 | 400 | 150 | 0,707 | 11,20 |
| 2103 | 40 | 175 | 0,083 | 1,85 |
| 2100 | 80 | 175 | 0,165 | 3,30 |
| 2102 | 120 | 175 | 0,247 | 4,70 |
| 2104 | 160 | 175 | 0,330 | 5,60 |
| 2106 | 200 | 175 | 0,412 | 6,75 |
| 2108 | 240 | 175 | 0,495 | 8,00 |
| 2110 | 280 | 175 | 0,577 | 9,50 |
| 2112 | 320 | 175 | 0,660 | 11,80 |
| 2114 | 360 | 175 | 0,742 | 12,15 |
| 2116 | 400 | 175 | 0,825 | 13,30 |
| 2101 | 40 | 200 | 0,094 | 2,20 |
| 2118 | 80 | 200 | 0,189 | 4,35 |
| 2120 | 120 | 200 | 0,283 | 5,75 |
| 2122 | 160 | 200 | 0,377 | 7,65 |
| 2124 | 200 | 200 | 0,471 | 9,35 |
| 2126 | 240 | 200 | 0,566 | 11,20 |
| 2128 | 280 | 200 | 0,660 | 13,25 |
| 2130 | 320 | 200 | 0,754 | 15,10 |
| 2132 | 360 | 200 | 0,850 | 17,05 |
| 2134 | 400 | 200 | 0,942 | 18,95 |
| 2135 | 40 | 225 | 0,106 | 2,40 |
| 2136 | 80 | 225 | 0,212 | 4,80 |
| 2138 | 120 | 225 | 0,318 | 6,25 |
| 2140 | 160 | 225 | 0,424 | 8,20 |
| 2142 | 200 | 225 | 0,530 | 10,10 |
| 2144 | 240 | 225 | 0,636 | 12,10 |
| 2146 | 280 | 225 | 0,742 | 14,35 |
| 2148 | 320 | 225 | 0,848 | 16,35 |
| 2150 | 360 | 225 | 0,954 | 18,40 |
| 2152 | 400 | 225 | 1,060 | 20,40 |
| 2193 | 40 | 250 | 0,118 | 6,50 |
| 2188 1 | 80 | 250 | 0,236 | 8,33 |
| 2195 1 | 120 | 250 | 0,353 | 10,15 |
| 2190 1 | 160 | 250 | 0,471 | 12,06 |
| 2192 | 200 | 250 | 0,590 | 13,88 |
| 2197 | 240 | 250 | 0,707 | 15,75 |
| 2194 | 280 | 250 | 0,825 | 17,93 |
| 2198 1 | 320 | 250 | 0,943 | 19,98 |
| 2199 1 | 360 | 250 | 1,060 | 21,98 |
| 2200 | 400 | 250 | 1,178 | 23,80 |
| 2180 | 40 | 260 | 0,123 | 6,76 |
| 2181 | 80 | 260 | 0,245 | 8,66 |
| 2182 | 120 | 260 | 0,268 | 10,56 |
| 2174 | 160 | 260 | 0,490 | 12,54 |
| 2184 | 200 | 260 | 0,613 | 14,44 |
| 2185 | 240 | 260 | 0,735 | 16,38 |
| 2186 | 280 | 260 | 0,858 | 18,65 |
| 2187 | 320 | 260 | 0,980 | 20,78 |
| 2188 | 360 | 260 | 0,980 | 22,86 |
| 2189 | 400 | 260 | 1,225 | 24,75 |
| 2190 | 40 | 280 | 0,132 | 7,46 |
| 2175 | 80 | 280 | 0,264 | 9,36 |
| 2179 | 120 | 280 | 0,396 | 11,26 |
| 2176 | 160 | 280 | 0,528 | 13,24 |
| 2177 | 200 | 280 | 0,660 | 15,15 |
| 2178 | 240 | 280 | 0,792 | 17,08 |
| 2121 | 280 | 280 | 0,924 | 19,35 |
| 2123 | 320 | 280 | 1,056 | 21,48 |
| 2125 | 360 | 280 | 1,188 | 23,56 |
| 2127 | 400 | 280 | 1,319 | 25,45 |

**sheet matal strength: 2,0 mm**

| Art.-Nr. 2,0 mm | Breite mm | Höhe mm | Gewicht/kg 2,0 mm | €/Stück 2,0 mm |
|---|---|---|---|---|
| 2105 2 | 40 | 150 | 0,094 | 2,80 |
| 2158 2 | 80 | 150 | 0,188 | 3,80 |
| 2160 2 | 120 | 150 | 0,283 | 5,05 |
| 2164 2 | 160 | 150 | 0,377 | 6,60 |
| 2159 2 | 200 | 150 | 0,471 | 7,80 |
| 21070 2 | 240 | 150 | 0,564 | 8,80 |
| 2163 2 | 280 | 150 | 0,672 | 9,60 |
| 2109 2 | 320 | 150 | 0,754 | 10,05 |
| 2111 2 | 360 | 150 | 0,846 | 11,30 |
| 2113 2 | 400 | 150 | 0,960 | 12,50 |
| 2103 2 | 40 | 175 | 0,110 | 3,00 |
| 2100 2 | 80 | 175 | 0,220 | 4,25 |
| 2102 2 | 120 | 175 | 0,330 | 5,60 |
| 2104 2 | 160 | 175 | 0,440 | 7,55 |
| 2106 2 | 200 | 175 | 0,550 | 8,85 |
| 2108 2 | 240 | 175 | 0,660 | 10,20 |
| 2110 2 | 280 | 175 | 0,770 | 11,80 |
| 2112 2 | 320 | 175 | 0,880 | 13,20 |
| 2114 2 | 360 | 175 | 0,990 | 14,65 |
| 2116 2 | 400 | 175 | 1,100 | 16,05 |
| 2101 2 | 40 | 200 | 0,130 | 3,25 |
| 2118 2 | 80 | 200 | 0,251 | 4,75 |
| 2120 2 | 120 | 200 | 0,377 | 6,35 |
| 2122 2 | 160 | 200 | 0,503 | 8,55 |
| 2124 2 | 200 | 200 | 0,628 | 10,05 |
| 2126 2 | 240 | 200 | 0,754 | 11,60 |
| 2128 2 | 280 | 200 | 0,880 | 14,10 |
| 2130 2 | 320 | 200 | 1,005 | 16,35 |
| 2132 2 | 360 | 200 | 1,131 | 18,00 |
| 2134 2 | 400 | 200 | 1,257 | 19,65 |
| 2135 2 | 40 | 225 | 0,141 | 3,40 |
| 2136 2 | 80 | 225 | 0,283 | 5,15 |
| 2138 2 | 120 | 225 | 0,424 | 6,85 |
| 2140 2 | 160 | 225 | 0,565 | 9,25 |
| 2142 2 | 200 | 225 | 0,707 | 10,95 |
| 2144 2 | 240 | 225 | 0,848 | 13,35 |
| 2146 2 | 280 | 225 | 0,990 | 15,40 |
| 2148 2 | 320 | 225 | 1,131 | 17,30 |
| 2150 2 | 360 | 225 | 1,272 | 19,05 |
| 2152 2 | 400 | 225 | 1,414 | 21,55 |
| 2193 2 | 40 | 250 | 0,157 | 6,88 |
| 2188 2 | 80 | 250 | 0,314 | 8,80 |
| 2195 2 | 120 | 250 | 0,330 | 10,72 |
| 2190 2 | 160 | 250 | 0,628 | 12,74 |
| 2192 2 | 200 | 250 | 0,785 | 14,66 |
| 2197 2 | 240 | 250 | 0,942 | 16,63 |
| 2194 2 | 280 | 250 | 1,100 | 18,94 |
| 2198 2 | 320 | 250 | 1,005 | 21,11 |
| 2199 2 | 360 | 250 | 1,413 | 23,22 |
| 2200 2 | 400 | 250 | 1,571 | 25,14 |
| 2180 2 | 40 | 260 | 0,163 | 7,15 |
| 2181 2 | 80 | 260 | 0,327 | 9,15 |
| 2182 2 | 120 | 260 | 0,490 | 11,15 |
| 2183 2 | 160 | 260 | 0,653 | 13,25 |
| 2184 2 | 200 | 260 | 0,817 | 15,25 |
| 2185 2 | 240 | 260 | 0,980 | 17,30 |
| 2186 2 | 280 | 260 | 1,144 | 19,70 |
| 2187 2 | 320 | 260 | 1,307 | 21,95 |
| 2195 | 360 | 260 | 1,470 | 24,15 |
| 2189 2 | 400 | 260 | 1,634 | 26,15 |
| 2191 2 | 40 | 280 | 0,176 | 7,95 |
| 2175 2 | 80 | 280 | 0,352 | 9,95 |
| 2179 2 | 120 | 280 | 0,528 | 11,95 |
| 2176 2 | 160 | 280 | 0,704 | 14,05 |
| 2177 2 | 200 | 280 | 0,880 | 16,05 |
| 2178 2 | 240 | 280 | 1,056 | 18,10 |
| 2121 2 | 280 | 280 | 1,231 | 20,05 |
| 2123 2 | 320 | 280 | 1,407 | 22,75 |
| 2125 2 | 360 | 280 | 1,583 | 24,95 |
| 2127 2 | 400 | 280 | 1,759 | 26,95 |

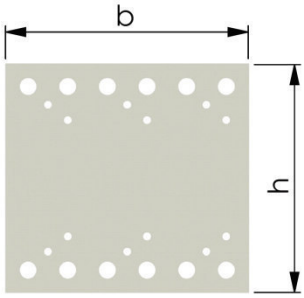

***Further dimensions on the next page***

**Free software to calculate sandwich anchors on following link: www.bgw-bohr.de/Setup.msi**

# BGW-Flat Anchor for Sandwich Pannels

(03/11)(02/07)

for sewing sandwich pannels

*Other dimensions are available upon special request.*

**Material: stainless steel 1.4571**

**sheet metal strength: 2,0 mm**

| Art.-Nr. 2,0 mm | Breite mm | Höhe mm | Gewicht/kg 2,0 mm | €/Stück 2,0 mm |
|---|---|---|---|---|
| 2129 2 | 40 | 300 | 0,188 | 8,85 |
| 2000 2 | 80 | 300 | 0,377 | 10,95 |
| 2001 2 | 120 | 300 | 0,565 | 12,95 |
| 2002 2 | 160 | 300 | 0,768 | 15,05 |
| 2003 2 | 200 | 300 | 0,960 | 17,08 |
| 2009 2 | 240 | 300 | 1,152 | 19,10 |
| 2004 2 | 280 | 300 | 1,344 | 21,10 |
| 2005 2 | 320 | 300 | 1,536 | 23,80 |
| 2006 2 | 360 | 300 | 1,728 | 24,95 |
| 2010 2 | 400 | 300 | 1,920 | 27,00 |
| 2033 2 | 40 | 320 | 0,201 | 9,85 |
| 2034 2 | 80 | 320 | 0,402 | 11,90 |
| 2035 2 | 120 | 320 | 0,603 | 13,90 |
| 2021 2 | 160 | 320 | 0,804 | 16,00 |
| 2036 2 | 200 | 320 | 1,005 | 18,15 |
| 2026 2 | 240 | 320 | 1,206 | 20,25 |
| 2027 2 | 280 | 320 | 1,407 | 22,30 |
| 2023 2 | 320 | 320 | 1,608 | 24,60 |
| 2025 2 | 360 | 320 | 1,809 | 25,90 |
| 2037 2 | 400 | 320 | 2,010 | 28,60 |

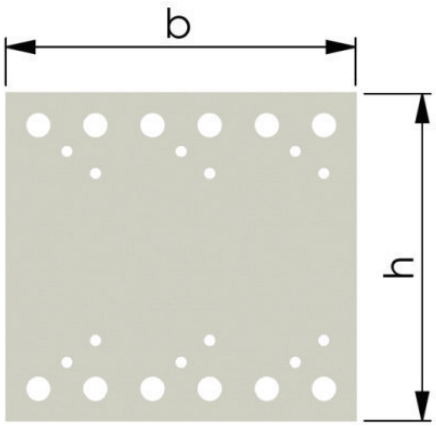


**sheet metal strength: 3,0 mm**

| Art.-Nr. 3,0 mm | Breite mm | Höhe mm | Gewicht/kg 3,0 mm | €/Stück 3,0 mm |
|---|---|---|---|---|
| 2193 3 | 40 | 250 | 0,236 | 10,32 |
| 2105 3 | 80 | 250 | 0,471 | 13,20 |
| 2195 3 | 120 | 250 | 0,707 | 16,09 |
| 2190 3 | 160 | 250 | 0,942 | 19,12 |
| 2192 3 | 200 | 250 | 1,178 | 22,00 |
| 2158 3 | 240 | 250 | 1,414 | 24,95 |
| 2194 3 | 280 | 250 | 1,649 | 28,41 |
| 2198 3 | 320 | 250 | 1,889 | 31,66 |
| 2199 3 | 360 | 250 | 2,121 | 34,84 |
| 2200 3 | 400 | 250 | 2,356 | 37,72 |
| 2180 3 | 40 | 260 | 0,245 | 10,73 |
| 2181 3 | 80 | 260 | 0,490 | 13,73 |
| 2182 3 | 120 | 260 | 0,735 | 16,73 |
| 2183 3 | 160 | 260 | 0,980 | 19,88 |
| 2184 3 | 200 | 260 | 1,225 | 22,88 |
| 2185 3 | 240 | 260 | 1,470 | 25,95 |
| 2186 3 | 280 | 260 | 1,715 | 29,55 |
| 2187 3 | 320 | 260 | 1,960 | 32,93 |
| 2188 3 | 360 | 260 | 2,205 | 36,23 |
| 2189 3 | 400 | 260 | 2,450 | 39,23 |
| 2191 3 | 40 | 280 | 0,264 | 11,54 |
| 2175 3 | 80 | 280 | 0,528 | 14,80 |
| 2197 3 | 120 | 280 | 0,792 | 18,02 |
| 2176 3 | 160 | 280 | 1,056 | 21,43 |
| 2177 3 | 200 | 280 | 1,319 | 24,63 |
| 2178 3 | 240 | 280 | 1,583 | 27,93 |
| 2121 3 | 280 | 280 | 1,847 | 31,82 |
| 2123 3 | 320 | 280 | 2,111 | 35,38 |
| 2125 3 | 360 | 280 | 2,375 | 39,01 |
| 2127 3 | 400 | 280 | 2,639 | 42,25 |
| 2129 3 | 40 | 300 | 0,283 | 12,38 |
| 2000 3 | 80 | 300 | 0,565 | 15,83 |
| 2001 3 | 120 | 300 | 0,848 | 19,30 |
| 2002 3 | 160 | 300 | 1,131 | 22,96 |
| 2003 3 | 200 | 300 | 1,414 | 26,41 |
| 2004 3 | 240 | 300 | 1,696 | 29,93 |
| 2196 3 | 280 | 300 | 1,979 | 34,10 |
| 2006 3 | 320 | 300 | 2,262 | 37,91 |
| 2007 3 | 360 | 300 | 2,545 | 41,80 |
| 2008 3 | 400 | 300 | 2,827 | 45,26 |
| 2033 3 | 40 | 320 | 0,301 | 12,88 |
| 2034 3 | 80 | 320 | 0,603 | 16,33 |
| 2035 3 | 120 | 320 | 0,904 | 19,80 |
| 2021 3 | 160 | 320 | 1,206 | 23,46 |
| 2036 3 | 200 | 320 | 1,505 | 27,91 |
| 2026 3 | 240 | 320 | 1,809 | 30,43 |
| 2027 3 | 280 | 320 | 2,110 | 34,80 |
| 2023 3 | 320 | 320 | 2,411 | 38,60 |
| 2025 3 | 360 | 320 | 2,713 | 43,40 |
| 2037 3 | 400 | 320 | 3,014 | 45,90 |

**Free software to calculate sandwich anchors on following link: www.bgw-bohr.de/Setup.msi**

# BGW-Sandwichpannel Anchor



for sewing sandwich pannels

***BGW*-Sandwichpannel Anchors** made of rust and acid-proof stainless steel

**Approval for BGW sandwich panel anchor SPA:**

http://bgw-bohr.de/pdf/Zulassung-Sandwichplattenanker.pdf

## SPA-1 Material: stainless steel 1.4401

| art.-no. | ∅ mm | d mm | weight kg/piece | price €/piece |
|---|---|---|---|---|
| SPA-1-5-160-A4 | 5 | 160 | 0,11 | 2,42 |
| SPA-1-5-180-A4 | 5 | 180 | 0,12 | 2,64 |
| SPA-1-5-200-A4 | 5 | 200 | 0,13 | 2,86 |
| SPA-1-6-160-A4 | 6 | 160 | 0,16 | 3,52 |
| SPA-1-6-180-A4 | 6 | 180 | 0,17 | 3,74 |
| SPA-1-6-200-A4 | 6 | 200 | 0,18 | 3,96 |
| SPA-1-6-220-A4 | 6 | 220 | 0,20 | 4,40 |
| SPA-1-6-240 A4 | 6 | 240 | 0,21 | 4,62 |
| SPA-1-6-260-A4 | 6 | 260 | 0,22 | 4,84 |
| SPA-1-7-160-A4 | 7 | 160 | 0,21 | 4,71 |
| SPA-1-7-180-A4 | 7 | 180 | 0,23 | 5,08 |
| SPA-1-7-200-A4 | 7 | 200 | 0,25 | 5,50 |
| SPA-1-7-220-A4 | 7 | 220 | 0,27 | 5,94 |
| SPA-1-7-240-A4 | 7 | 240 | 0,28 | 6,23 |
| SPA-1-7-260-A4 | 7 | 260 | 0,30 | 6,60 |
| SPA-1-8-200A4 | 8 | 200 | 0,32 | 7,04 |
| SPA-1-8-220-A4 | 8 | 220 | 0,35 | 7,70 |
| SPA-1-8-240-A4 | 8 | 240 | 0,37 | 8,14 |
| SPA-1-8-260-A4 | 8 | 260 | 0,39 | 8,58 |
| SPA-1-8-280-A4 | 8 | 280 | 0,41 | 9,02 |
| SPA-1-8-300-A4 | 8 | 300 | 0,44 | 9,68 |
| SPA-1-8-320-A4 | 8 | 320 | 0,46 | 10,12 |
| SPA-1-9-260-A4 | 9 | 260 | 0,50 | 11,00 |
| SPA-1-9-280-A4 | 9 | 280 | 0,54 | 11,88 |
| SPA-1-9-300-A4 | 9 | 300 | 0,55 | 12,10 |
| SPA-1-9-320-A4 | 9 | 320 | 0,58 | 12,76 |
| SPA-1-9-340-A4 | 9 | 340 | 0,65 | 14,30 |
| SPA-1-9-360-A4 | 9 | 360 | 0,68 | 14,96 |
| SPA-1-9-380-A4 | 9 | 380 | 0,70 | 15,40 |
| SPA-1-9-400-A4 | 9 | 400 | 0,73 | 16,06 |
| SPA-1-10-260-A4 | 10 | 260 | 0,658 | 14,48 |
| SPA-1-10-280-A4 | 10 | 280 | 0,693 | 15,25 |
| SPA-1-10-300-A4 | 10 | 300 | 0,727 | 15,99 |
| SPA-1-10-320-A4 | 10 | 320 | 0,762 | 16,76 |
| SPA-1-10-340-A4 | 10 | 340 | 0,796 | 17,51 |
| SPA-1-10-360-E | 10 | 360 | 0,830 | 18,26 |
| SPA-1-10-380-A4 | 10 | 380 | 0,865 | 19,03 |
| SPA-1-10-400-A4 | 10 | 400 | 0,900 | 19,80 |
| SPA-1-10-420-A4 | 10 | 420 | 0,935 | 20,57 |

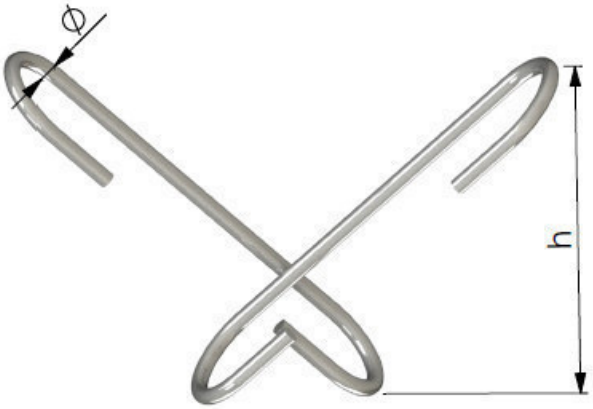


**Free software to calculate sandwich anchors on following link: www.bgw-bohr.de/Setup.msi**

# BGW-Sandwichpannel Anchor



for sewing sandwich pannels

***BGW*-Sandwichpannel Anchors** made of rust and acid-proof stainless steel

**Approval for BGW sandwich panel anchor SPA:**

http://bgw-bohr.de/pdf/Zulassung-Sandwichplattenanker.pdf

## SPA-2 Material: stainless steel 1.4401

| art.-no. | ∅ mm | d mm | weight kg/piece | price €/piece |
|---|---|---|---|---|
| SPA-2-5-160-A4 | 5 | 160 | 0,19 | 4,18 |
| SPA-2-5-180-A4 | 5 | 180 | 0,21 | 4,62 |
| SPA-2-5-200-A4 | 5 | 200 | 0,23 | 5,06 |
| SPA-2-6-160-A4 | 6 | 160 | 0,27 | 5,94 |
| SPA-2-6-180-A4 | 6 | 180 | 0,30 | 6,60 |
| SPA-2-6-200-A4 | 6 | 200 | 0,32 | 7,04 |
| SPA-2-6-220-A4 | 6 | 220 | 0,35 | 7,70 |
| SPA-2-6-240-A4 | 6 | 240 | 0,37 | 8,14 |
| SPA-2-6-260-A4 | 6 | 260 | 0,40 | 8,80 |
| SPA-2-7-160-A4 | 7 | 160 | 0,37 | 8,21 |
| SPA-2-7-180-A4 | 7 | 180 | 0,41 | 9,02 |
| SPA-2-7-200-A4 | 7 | 200 | 0,44 | 9,72 |
| SPA-2-7-220-A4 | 7 | 220 | 0,48 | 10,56 |
| SPA-2-7-240-A4 | 7 | 240 | 0,51 | 11,24 |
| SPA-2-7-260-A4 | 7 | 260 | 0,55 | 12,10 |
| SPA-2-8-200-A4 | 8 | 200 | 0,58 | 12,76 |
| SPA-2-8-220-A4 | 8 | 220 | 0,62 | 13,64 |
| SPA-2-8-240-A4 | 8 | 240 | 0,67 | 14,74 |
| SPA-2-8-260-A4 | 8 | 260 | 0,71 | 15,62 |
| SPA-2-8-280-A4 | 8 | 280 | 0,75 | 16,50 |
| SPA-2-8-300-A4 | 8 | 300 | 0,80 | 17,60 |
| SPA-2-8-320-A4 | 8 | 320 | 0,84 | 18,48 |
| SPA-2-9-260-A4 | 9 | 260 | 0,91 | 20,02 |
| SPA-2-9-280-A4 | 9 | 280 | 0,95 | 20,99 |
| SPA-2-9-300-A4 | 9 | 300 | 1,01 | 22,31 |
| SPA-2-9-320-A4 | 9 | 320 | 1,07 | 23,54 |
| SPA-2-9-340-A4 | 9 | 340 | 1,19 | 26,18 |
| SPA-2-9-360-A4 | 9 | 360 | 1,25 | 27,50 |
| SPA-2-9-380-A4 | 9 | 380 | 1,30 | 28,60 |
| SPA-2-9-400-A4 | 9 | 400 | 1,36 | 29,92 |
| SPA-2-10-260-A4 | 10 | 260 | 1,185 | 26,07 |
| SPA-2-10-280-A4 | 10 | 280 | 1,254 | 27,59 |
| SPA-2-10-300-A4 | 10 | 300 | 1,329 | 29,24 |
| SPA-2-10-320-A4 | 10 | 320 | 1,392 | 30,62 |
| SPA-2-10-340-E | 10 | 340 | 1,462 | 32,16 |
| SPA-2-10-360-E | 10 | 360 | 1,530 | 33,66 |
| SPA-2-10-380-A4 | 10 | 380 | 1,600 | 35,20 |
| SPA-2-10-400-A4 | 10 | 400 | 1,668 | 36,70 |
| SPA-2-10-420-A4 | 10 | 420 | 1,738 | 38,24 |

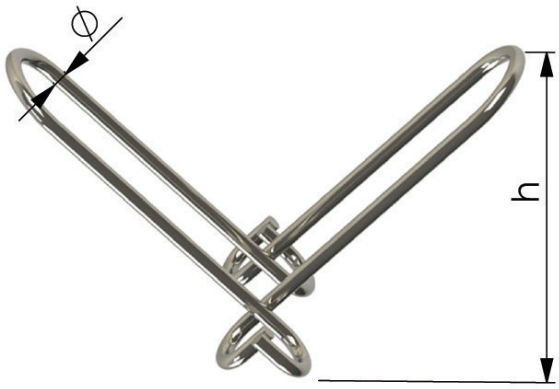


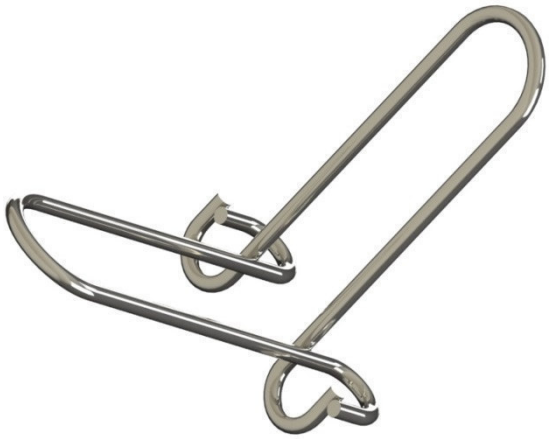

**Free software to calculate sandwich anchors on following link: www.bgw-bohr.de/Setup.msi**

# *BGW*-hairpins *BGW*-Verbundhaarnadeln

08/11 (01/10)

***BGW*-hairpins** **out of rust- and acid resident stainless steel.**

## Approval for BGW sandwich panel anchor SPA-N:

*http://bgw-bohr.de/pdf/Zulassung-Sandwichplattenanker.pdf*

## BGW-hairpin – VN or SPA-N Material: stainless steel 1.4401

| art.-no. | h mm | ∅ mm | weight /kg | packaging unit | price €/piece |
|---|---|---|---|---|---|
| 2340-160 | 160 | 2,5 | | 1.000 | price on demand |
| 2340 | 300 | 2,5 | | 1.000 | |
| 2342 | 360 | 2,5 | | 1.000 | |
| 2300 | 120 | 3,0 | 0,015 | 1.000 | 0,32 |
| 2302 | 140 | 3,0 | 0,017 | 1.000 | 0,36 |
| 2304 | 160 | 3,0 | 0,019 | 1.000 | 0,40 |
| 2306 | 180 | 3,0 | 0,022 | 1.000 | 0,46 |
| 2308 | 200 | 3,0 | 0,023 | 1.000 | 0,48 |
| 2310 | 220 | 3,0 | 0,026 | 1.000 | 0,55 |
| 2312 | 240 | 3,0 | 0,028 | 1.000 | 0,59 |
| 2314 | 160 | 4,0 | 0,035 | 500 | 0,73 |
| 2315 | 180 | 4,0 | 0,039 | 500 | 0,82 |
| 2316 | 200 | 4,0 | 0,043 | 500 | 0,91 |
| 2321 | 220 | 4,0 | 0,047 | 500 | 0,99 |
| 2318 | 230 | 4,0 | 0,049 | 500 | 1,03 |
| 2319 | 240 | 4,0 | 0,051 | 500 | 1,07 |
| 2320 | 250 | 4,0 | 0,053 | 250 | 1,11 |
| 2320-260 | 260 | 4,0 | 0,055 | 250 | 1,16 |
| 2320-270 | 270 | 4,0 | 0,057 | 250 | 1,20 |
| 2322 | 280 | 4,0 | 0,059 | 250 | 1,24 |
| 2322-300 | 300 | 4,0 | 0,063 | 250 | 1,32 |
| 2322-320 | 320 | 4,0 | 0,067 | 250 | 1,41 |
| 2322-340 | 340 | 4,0 | 0,072 | 250 | 1,51 |
| 2322-350 | 350 | 4,0 | 0,074 | 250 | 1,55 |
| 2322-360 | 360 | 4,0 | 0,076 | 250 | 1,59 |
| 2322-380 | 380 | 4,0 | 0,080 | 250 | 1,68 |
| 2322-400 | 400 | 4,0 | 0,084 | 250 | 1,76 |
| 2323 | 200 | 5,0 | 0,067 | 250 | 1,40 |
| 2331 | 220 | 5,0 | 0,073 | 250 | 1,53 |
| 2325 | 230 | 5,0 | 0,076 | 250 | 1,60 |
| 2325-240 | 240 | 5,0 | 0,079 | 250 | 1,66 |
| 2326 | 250 | 5,0 | 0,082 | 250 | 1,72 |
| 23261 | 260 | 5,0 | 0,085 | 250 | 1,78 |
| 2327 | 280 | 5,0 | 0,091 | 250 | 1,91 |
| 2328 | 300 | 5,0 | 0,098 | 250 | 2,06 |
| 2329 | 320 | 5,0 | 0,104 | 250 | 2,19 |
| 2322-330 | 330 | 5,0 | 0,108 | 250 | 2,27 |
| 23291 | 340 | 5,0 | 0,111 | 250 | 2,33 |
| 2322-360 5 | 360 | 5,0 | 0,119 | 250 | 2,50 |
| 23271 | 380 | 5,0 | 0,123 | 250 | 2,58 |
| 2322-400 5 | 400 | 5,0 | 0,131 | 250 | 2,75 |
| 2323 6 | 200 | 6,0 | 0,103 | 250 | 2,16 |
| 2331 6 | 220 | 6,0 | 0,112 | 250 | 2,35 |
| 2325-240 6 | 240 | 6,0 | 0,120 | 250 | 2,52 |
| 23261 6 | 260 | 6,0 | 0,127 | 100 | 2,67 |
| 2327 6 | 280 | 6,0 | 0,136 | 100 | 2,86 |
| 2328 6 | 300 | 6,0 | 0,145 | 100 | 3,05 |
| 2329 6 | 320 | 6,0 | 0,154 | 100 | 3,24 |
| 2336 | 340 | 6,0 | 0,162 | 100 | 3,40 |
| 2332 | 355 | 6,0 | 0,185 | 100 | 3,88 |
| 2333 | 360 | 6,0 | 0,196 | 100 | 4,12 |
| 2334 | 380 | 6,0 | 0,207 | 100 | 4,35 |
| 2330 | 400 | 6,0 | 0,218 | 100 | 4,58 |
| 2335 | 420 | 6,0 | 0,229 | 100 | 4,81 |

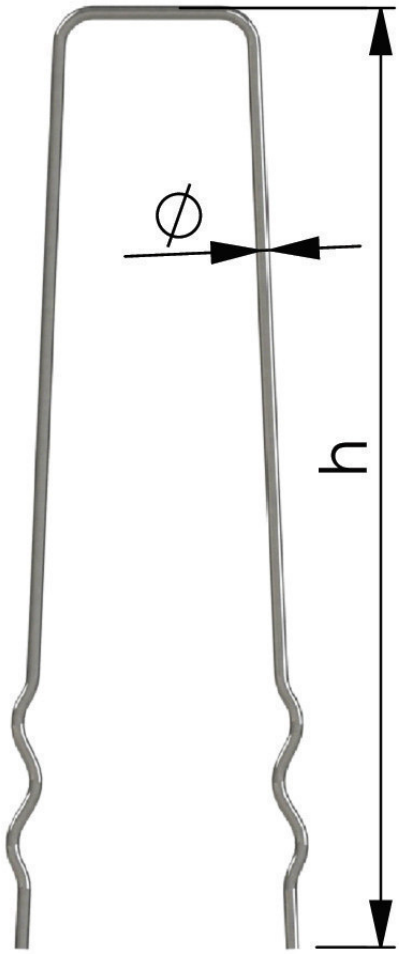


***Free software to calculate sandwichanchors on following link:***
*www.bgw-bohr.de/Setup.msi*

***Other sizes available on request***

# *BGW*-clip-on-pins

08/11 (01/10)

***BGW*-**Anstecknadeln

***BGW*-clip-on-pins** out of rust- and acid resident stainless steel.
*Other dimensions are available on request*
Clip-on-pins to clip. Clip-on-pins for sewing – on demand.

## Approval for BGW sandwich panel anchor SPA-A:

*http://bgw-bohr.de/pdf/Zulassung-Sandwichplattenanker.pdf*

### *BGW*-clip-on-pins – AN or SPA-A Material: stainless steel 1.4401

| art.-no. | h mm | ∅ mm | weight/kg | packaging unit | price €/piece |
|---|---|---|---|---|---|
| 2380 | 120 | 3,0 | 0,023 | 1.000 | 0,51 |
| 2382 | 140 | 3,0 | 0,025 | 1.000 | 0,56 |
| 2384 | 160 | 3,0 | 0,028 | 1.000 | 0,61 |
| 2386 | 180 | 3,0 | 0,030 | 1.000 | 0,65 |
| 2405 | 200 | 3,0 | 0,032 | 1000 | 0,70 |
| 2406 | 220 | 3,0 | 0,034 | 1000 | 0,75 |
| 2407 | 240 | 3,0 | 0,036 | 1000 | 0,80 |
| 2388-120 | 120 | 4,0 | 0,042 | 500 | 0,91 |
| 2387 | 140 | 4,0 | 0,046 | 500 | 1,00 |
| 2388-150 | 150 | 4,0 | 0,048 | 500 | 1,05 |
| 2388 | 160 | 4,0 | 0,050 | 500 | 1,09 |
| 2388-180 | 180 | 4,0 | 0,053 | 500 | 1,18 |
| 2390 | 200 | 4,0 | 0,057 | 500 | 1,26 |
| 2391 | 220 | 4,0 | 0,061 | 500 | 1,35 |
| 2393 | 230 | 4,0 | 0,063 | 500 | 1,39 |
| 2391-240 | 240 | 4,0 | 0,065 | 500 | 1,44 |
| 2392 | 250 | 4,0 | 0,067 | 500 | 1,48 |
| 2392-260 | 260 | 4,0 | 0,069 | 500 | 1,52 |
| 2394 | 280 | 4,0 | 0,073 | 250 | 1,61 |
| 2396 | 200 | 5,0 | 0,089 | 250 | 1,97 |
| 2396-220 | 220 | 5,0 | 0,095 | 250 | 2,10 |
| 2396-240 | 240 | 5,0 | 0,102 | 250 | 2,24 |
| 2398 | 250 | 5,0 | 0,105 | 250 | 2,30 |
| 2398-260 | 260 | 5,0 | 0,108 | 250 | 2,37 |
| 2399 | 280 | 5,0 | 0,114 | 250 | 2,51 |
| 2399-300 | 300 | 5,0 | 0,120 | 250 | 2,64 |
| 2381 | 320 | 5,0 | 0,126 | 200 | 2,78 |
| 2381-340 | 340 | 5,0 | 0,132 | 200 | 2,91 |
| 2381-360 | 360 | 5,0 | 0,139 | 200 | 3,05 |
| 2381-380 | 380 | 5,0 | 0,145 | 200 | 3,18 |
| 2381-400 | 400 | 5,0 | 0,151 | 200 | 3,32 |
| 2381-420 | 420 | 5,0 | 0,157 | 200 | 3,46 |
| 2408 | 260 | 6,0 | 0,155 | 150 | 3,42 |
| 2409 | 280 | 6,0 | 0,164 | 150 | 3,61 |
| 2410 | 300 | 6,0 | 0,173 | 150 | 3,81 |
| 2411 | 320 | 6,0 | 0,182 | 150 | 4,00 |
| 2397 | 330 | 6,0 | 0,186 | 100 | 4,10 |
| 2400 | 340 | 6,0 | 0,191 | 100 | 4,20 |
| 2401 | 360 | 6,0 | 0,200 | 100 | 4,40 |
| 2402 | 380 | 6,0 | 0,209 | 100 | 4,59 |
| 2403 | 400 | 6,0 | 0,218 | 100 | 4,79 |
| 2404 | 420 | 6,0 | 0,226 | 100 | 4,98 |
| 2395 | 330 | 8,0 | 0,332 | 50 | 7,30 |

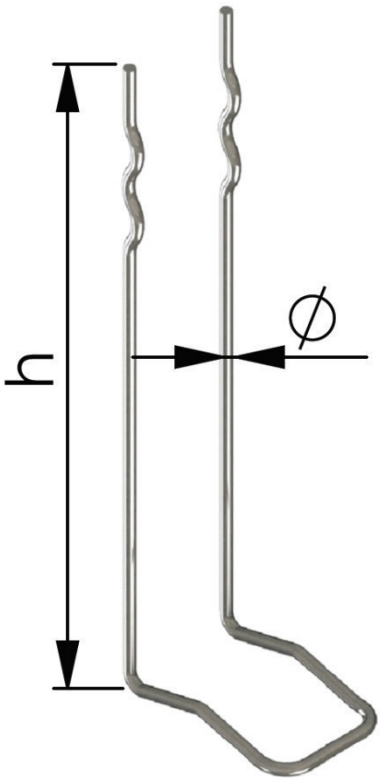


sewing:
*from h longer 250mm on mat node 150 additional with nail sewing*

clip:
*until h 250mm possible – because of mat node*

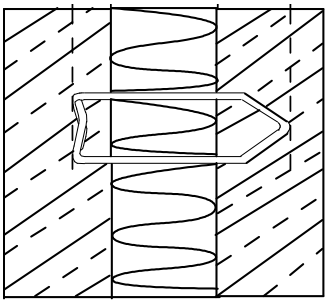

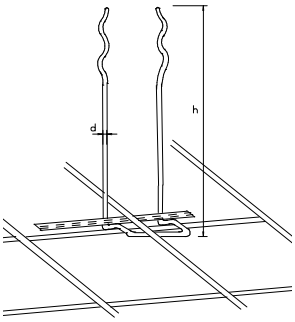


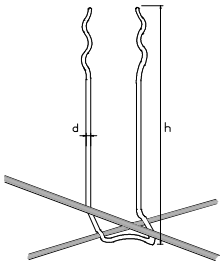


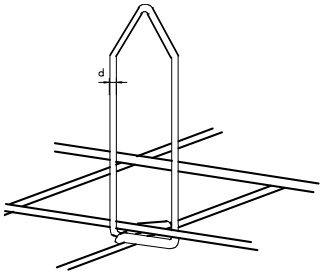


**Please observe our installation instructions**

# *BGW*-clip-on-stirrups BGW-Verbundbügel

08/11 (01/10)

***BGW*-clip-on-stirrups** out of rust- and acid resident stainless steel.

## Approval for BGW sandwich panel anchor SPA-B:

*http://bgw-bohr.de/pdf/Zulassung-Sandwichplattenanker.pdf*

***BGW*-clip-on-stirrups – VB or SPA-B** Material: stainless steel 1.4401

| Art.-Nr. | h mm | ∅ mm | Gewicht /kg | Verpackungs-einheit VE | Preis €/Stück |
|---|---|---|---|---|---|
| 2350 | 155 | 3,0 | 0,022 | 500 | 0,49 |
| 2352 | 175 | 3,0 | 0,024 | 500 | 0,53 |
| 2354 | 205 | 3,0 | 0,027 | 500 | 0,60 |
| 2356 | 250 | 3,0 | 0,032 | 500 | 0,71 |
| 2351 | 135 | 4,0 | 0,032 | 500 | 0,70 |
| 2357 | 140 | 4,0 | 0,033 | 500 | 0,73 |
| 2358 | 155 | 4,0 | 0,036 | 500 | 0,79 |
| 2359 | 160 | 4,0 | 0,037 | 500 | 0,81 |
| 2360 | 175 | 4,0 | 0,041 | 500 | 0,90 |
| 2360-180 | 180 | 4,0 | 0,042 | 500 | 0,92 |
| 2360-190 | 190 | 4,0 | 0,044 | 500 | 0,97 |
| 2362 | 205 | 4,0 | 0,053 | 500 | 1,17 |
| 2365 | 220 | 4,0 | 0,057 | 500 | 1,25 |
| 2363 | 240 | 4,0 | 0,062 | 500 | 1,36 |
| 2364 | 250 | 4,0 | 0,065 | 250 | 1,43 |
| 2364-260 | 260 | 4,0 | 0,067 | 250 | 1,47 |
| 2361-280 | 280 | 4,0 | 0,071 | 250 | 1,56 |
| 2361-300 | 300 | 4,0 | 0,073 | 250 | 1,60 |
| 2361-320 | 320 | 4,0 | 0,078 | 250 | 1,72 |
| 2361-340 | 340 | 4,0 | 0,082 | 250 | 1,80 |
| 2361-360 | 360 | 4,0 | 0,087 | 250 | 1,91 |
| 2361-380 | 380 | 4,0 | 0,091 | 250 | 2,00 |
| 2361-400 | 400 | 4,0 | 0,094 | 250 | 2,07 |
| 2373-180 | 180 | 5,0 | 0,066 | 250 | 1,45 |
| 2373-200 | 200 | 5,0 | 0,073 | 250 | 1,60 |
| 2373 | 205 | 5,0 | 0,083 | 250 | 1,83 |
| 2373-220 | 220 | 5,0 | 0,089 | 250 | 1,96 |
| 2349 | 230 | 5,0 | 0,093 | 250 | 2,05 |
| 2366 | 240 | 5,0 | 0,097 | 250 | 2,13 |
| 2366-250 | 250 | 5,0 | 0,101 | 250 | 2,22 |
| 2367 | 260 | 5,0 | 0,105 | 250 | 2,31 |
| 2368 | 280 | 5,0 | 0,110 | 250 | 2,42 |
| 2369 | 300 | 5,0 | 0,113 | 250 | 2,49 |
| 2371 | 320 | 5,0 | 0,122 | 200 | 2,68 |
| 2371-340 | 340 | 5,0 | 0,128 | 200 | 2,82 |
| 2371-360 | 360 | 5,0 | 0,135 | 200 | 2,97 |
| 2371-380 | 380 | 5,0 | 0,141 | 200 | 3,10 |
| 2371-400 | 400 | 5,0 | 0,147 | 200 | 3,23 |
| 2361 6 | 200 | 6,0 | 0,105 | 200 | 2,31 |
| 2365 6 | 220 | 6,0 | 0,128 | 200 | 2,82 |
| 2366 6 | 240 | 6,0 | 0,140 | 200 | 3,08 |
| 2367 6 | 260 | 6,0 | 0,150 | 100 | 3,30 |
| 2368 6 | 280 | 6,0 | 0,158 | 100 | 3,48 |
| 2369 6 | 300 | 6,0 | 0,167 | 100 | 3,67 |
| 2371 6 | 320 | 6,0 | 0,176 | 100 | 3,87 |
| 2371-340 6 | 340 | 6,0 | 0,185 | 100 | 4,07 |
| 2371-360 6 | 360 | 6,0 | 0,194 | 100 | 4,27 |
| 2371-380 6 | 380 | 6,0 | 0,203 | 100 | 4,47 |
| 2371-400 6 | 400 | 6,0 | 0,212 | 100 | 4,66 |

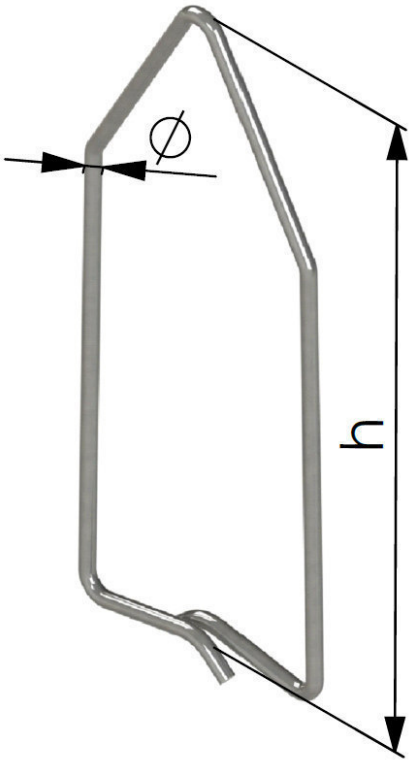


***Free software to calculate sandwichanchors on following link:***
*www.bgw-bohr.de/Setup.msi*

***Other sizes available on request***

# *BGW*TU – Rail (trapezoidal metal base)



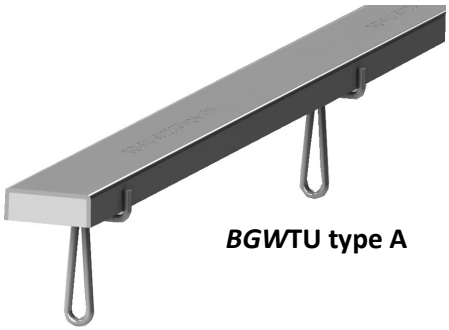

***BGW*TU type A**

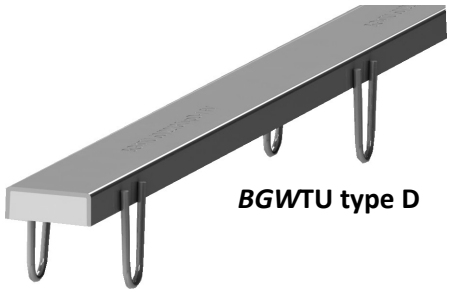

***BGW*TU type D**

***BGW*TU** is a U-shaped metal rail, which is embedded in pillars in the precast concrete factory.
This eliminates the dowels during assembly.

When assembling the structure, components can be fixed to the precast concrete elements using self-tapping screws using the ***BGW*TU** metal rail.

When calculating the screw length, it must be taken into account that the screwing depth into the ***BGW*TU** metal rail is max. 20 mm.

The length of the ***BGW*TU** is 3 m and consists of 3 mm hot-dip galvanized sheet metal or stainless steel 1.4301 or 1.4571.

**<u>The anchor shapes:</u>**

- **A=Fork anchor:** The anchor is 100 mm long for the central anchoring of the rail.
- **D=Ears anchor:** The anchor is about 75 mm long on the side of the rail.

According to the approval report No. 11-143, the nominal breaking load of 12.5 kN per anchor was achieved for the ***BGW*TU** metal rails. (This approval report can be found on our website).

The choice of anchor type depends on the position of the reinforcement. With the different number of welded anchors, the metal rail can be split longitudinally with 8 anchors in the middle and 20 anchors every 150 mm. With 7 anchors for piece installation.

## *BGW*TU

| art.-no. | description | type | version galvanized | weight/ piece | price € /piece | price € /meter |
|---|---|---|---|---|---|---|
| 56469 | *BGW*TU 60/22/3 | A1 fork anchor 7 pcs | 3 m long | 7,4 kg | 42,00 | 14,00 |
| 56470 | *BGW*TU 60/22/3 | A2 fork anchor 8 pcs | 3 m long, divisible in the middle | 7,4 kg | 42,00 | 14,00 |
| 56471 | *BGW*TU 60/22/3 | A3 fork anchor 20 pcs | 3 m long , divisible every 150 mm | 8 kg | 60,00 | 20,00 |
| 56467 | *BGW*TU 60/22/3 | D2 ears anchor 8 pcs on each side | 3 m long, divisible | 8 kg | 45,00 | 15,00 |
| 56468 | *BGW*TU 60/22/3 | D3 ears anchor 20 pcs on each side | 3 m long, divisible every 150 mm | 9 kg | 64,50 | 21,50 |

***Packaging Unit:***
***1 pallet with fork anchor: 48 pcs.***
***1 pallet with ears anchor: 100 pcs.***

# *BGW*-Anchor channels, cold formed



with European Technical Approval ETA–16/0387

**Approval Anchor channels:** *http://bgw-bohr.de/pdf_Ankerschienen_ETA-Zulassung-2017.pdf*

| profile cross section | art.-no. | | pro-file | lengt h mm | price €/pcs | price €/pcs |
|---|---|---|---|---|---|---|
| | galv. | V4A | | | galv. | V4A |
| 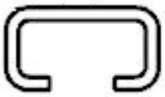 | AS-28/15-100 | AS-28/15-100E | 28/15 | 100 | 5,30 | 15,25 |
| | AS-28/15-150 | AS-28/15-150E | 28/15 | 150 | 5,85 | 17,05 |
| | AS-28/15-200 | AS-28/15-200E | 28/15 | 200 | 6,40 | 18,75 |
| | AS-28/15-250 | AS-28/15-250E | 28/15 | 250 | 7,00 | 20,70 |
| | AS-28/15-300 | AS-28/15-300E | 28/15 | 300 | 7,30 | 22,30 |
| | AS-28/15-350 | AS-28/15-350E | 28/15 | 350 | 11,60 | 27,85 |
| | AS-28/15-450 | AS-28/15-450E | 28/15 | 450 | 12,60 | 32,10 |
| | AS-28/15-550 | AS-28/15-550E | 28/15 | 550 | 13,20 | 36,25 |
| | AS-28/15-850 | AS-28/15-850E | 28/15 | 850 | 18,40 | 52,55 |
| | AS-28/15-1050 | AS-28/15-1050E | 28/15 | 1050 | 21,85 | 65,70 |
| | AS-28/15-3050 | AS-28/15-3050E | 28/15 | 3050 | 50,90 | 181,90 |
| | AS-28/15-6070 | AS-28/15-6070E | 28/15 | 6070 | 96,30 | 344,70 |
| 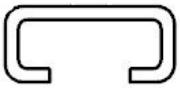 | AS-38/17-100 | AS-38/17-100E | 38/17 | 100 | 6,55 | 18,75 |
| | AS-38/17-150 | AS-38/17-150E | 38/17 | 150 | 7,25 | 21,75 |
| | AS-38/17-200 | AS-38/17-200E | 38/17 | 200 | 7,90 | 24,50 |
| | AS-38/17-250 | AS-38/17-250E | 38/17 | 250 | 8,60 | 27,20 |
| | AS-38/17-300 | AS-38/17-300E | 38/17 | 300 | 9,60 | 30,00 |
| | AS-38/17-350 | AS-38/17-350E | 38/17 | 350 | 13,95 | 37,40 |
| | AS-38/17-450 | AS-38/17-450E | 38/17 | 450 | 14,55 | 43,95 |
| | AS-38/17-550 | AS-38/17-550E | 38/17 | 550 | 16,35 | 51,90 |
| | AS-38/17-850 | AS-38/17-850E | 38/17 | 850 | 21,05 | 70,90 |
| | AS-38/17-1050 | AS-38/17-1050E | 38/17 | 1050 | 27,55 | 94,40 |
| | AS-38/17-3050 | AS-38/17-3050E | 38/17 | 3050 | 67,70 | 273,60 |
| | AS-38/17-6070 | AS-38/17-6070E | 38/17 | 6070 | 128,60 | 518,60 |
| 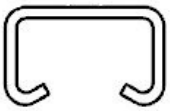 | AS-40/25-150 | AS-40/25-150E | 40/25 | 150 | 8,60 | 24,50 |
| | AS-40/25-200 | AS-40/25-200E | 40/25 | 200 | 9,45 | 27,55 |
| | AS-40/25-250 | AS-40/25-250E | 40/25 | 250 | 10,10 | 32,50 |
| | AS-40/25-300 | AS-40/25-300E | 40/25 | 300 | 10,90 | 36,95 |
| | AS-40/25-350 | AS-40/25-350E | 40/25 | 350 | 13,60 | 43,95 |
| | AS-40/25-400 | AS-40/25-400E | 40/25 | 400 | 14,55 | 48,10 |
| | AS-40/25-550 | AS-40/25-550E | 40/25 | 550 | 17,05 | 61,50 |
| | AS-40/25-800 | AS-40/25-800E | 40/25 | 800 | 23,30 | 87,35 |
| | AS-40/25-1050 | AS-40/25-1050E | 40/25 | 1050 | 29,85 | 111,70 |
| | AS-40/25-3050 | AS-40/25-3050E | 40/25 | 3050 | 78,80 | 298,30 |
| | AS-40/25-6070 | AS-40/25-6070E | 40/25 | 6070 | 150,20 | 589,25 |
| 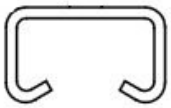 | AS-49/30-150 | AS-49/30-150E | 49/30 | 150 | 10,90 | 28,75 |
| | AS-49/30-200 | AS-49/30-200E | 49/30 | 200 | 11,75 | 33,55 |
| | AS-49/30-250 | AS-49/30-250E | 49/30 | 250 | 12,55 | 38,85 |
| | AS-49/30-300 | AS-49/30-300E | 49/30 | 300 | 13,50 | 44,85 |
| | AS-49/30-350 | AS-49/30-350E | 49/30 | 350 | 17,60 | 54,50 |
| | AS-49/30-400 | AS-49/30-400E | 49/30 | 400 | 18,75 | 60,25 |
| | AS-49/30-550 | AS-49/30-550E | 49/30 | 550 | 21,50 | 78,00 |
| | AS-49/30-800 | AS-49/30-800E | 49/30 | 800 | 29,70 | 109,95 |
| | AS-49/30-1050 | AS-49/30-1050E | 49/30 | 1050 | 36,70 | 143,30 |
| | AS-49/30-3050 | AS-49/30-3050E | 49/30 | 3050 | 103,90 | 410,95 |
| | AS-49/30-6070 | AS-49/30-6070E | 49/30 | 6070 | 198,40 | 779,20 |

# *BGW*-Anchor channels, hot-rolled



with European Technical Approval ETA–16/0387

**Approval Anchor channels:** *http://bgw-bohr.de/pdf_Ankerschienen_ETA-Zulassung-2017.pdf*

| profile cross section | art.-no. | | profile | length mm | price €/pcs. | price €/pcs. |
|---|---|---|---|---|---|---|
| | galvanized | V4A | | | galv. | V4A |
| 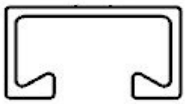 | AS-40/22-150 | AS-40/22-150E | 40/22 | 150 | 9,45 | 29,25 |
| | AS-40/22-200 | AS-40/22-200E | 40/22 | 200 | 10,55 | 34,90 |
| | AS-40/22-250 | AS-40/22-250E | 40/22 | 250 | 11,50 | 41,10 |
| | AS-40/22-300 | AS-40/22-300E | 40/22 | 300 | 12,55 | 47,65 |
| | AS-40/22-350 | AS-40/22-350E | 40/22 | 350 | 16,20 | 57,35 |
| | AS-40/22-400 | AS-40/22-400E | 40/22 | 400 | 17,25 | 63,70 |
| | AS-40/22-550 | AS-40/22-550E | 40/22 | 550 | 20,20 | 82,45 |
| | AS-40/22-800 | | 40/22 | 800 | 27,90 | |
| | AS-40/22-1050 | AS-40/22-1050E | 40/22 | 1050 | 35,35 | 152,15 |
| | AS-40/22-1300 | | 40/22 | 1300 | 42,50 | |
| | AS-40/22-1550 | | 40/22 | 1550 | 50,10 | |
| | AS-40/22-1800 | | 40/22 | 1800 | 57,55 | |
| | AS-40/22-2050 | | 40/22 | 2050 | 65,15 | |
| | AS-40/22-2300 | | 40/22 | 2300 | 72,60 | |
| | AS-40/22-2550 | | 40/22 | 2550 | 80,05 | |
| | AS-40/22-3050 | | 40/22 | 3050 | 95,00 | |
| | AS-40/22-6070 | AS-40/22-6070E | 40/22 | 6070 | 181,50 | 837,60 |
| 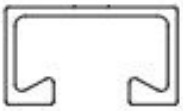 | AS-50/30-150 | AS-50/30-150E | 50/30 | 150 | 12,75 | 41,10 |
| | AS-50/30-200 | AS-50/30-200E | 50/30 | 200 | 14,35 | 50,60 |
| | AS-50/30-250 | AS-50/30-250E | 50/30 | 250 | 15,75 | 60,40 |
| | AS-50/30-300 | AS-50/30-300E | 50/30 | 300 | 17,40 | 70,15 |
| | AS-50/30-350 | AS-50/30-350E | 50/30 | 350 | 21,70 | 84,10 |
| | AS-50/30-400 | AS-50/30-400E | 50/30 | 400 | 23,30 | 93,70 |
| | AS-50/30-550 | AS-50/30-550E | 50/30 | 550 | 27,90 | 122,30 |
| | AS-50/30-800 | AS-50/30-800E | 50/30 | 800 | 38,60 | 176,55 |
| | AS-50/30-1050 | AS-50/30-1050E | 50/30 | 1050 | 49,25 | 226,90 |
| | AS-50/30-3050 | AS-50/30-3050E | 50/30 | 3050 | 129,25 | 650,25 |
| | AS-50/30-6070 | AS-50/30-6070E | 50/30 | 6070 | 248,85 | 1.251,90 |
| 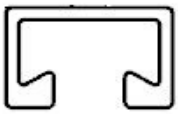 | AS-52/34-150 | AS-52/34-150E | 52/34 | 150 | 18,15 | 58,10 |
| | AS-52/34-200 | AS-52/34-200E | 52/34 | 200 | 20,50 | 70,60 |
| | AS-52/34-250 | AS-52/34-250E | 52/34 | 250 | 22,95 | 83,05 |
| | AS-52/34-300 | AS-52/34-300E | 52/34 | 300 | 25,25 | 95,35 |
| | AS-52/34-350 | AS-52/34-350E | 52/34 | 350 | 31,95 | 114,45 |
| | AS-52/34-400 | AS-52/34-400E | 52/34 | 400 | 34,35 | 126,70 |
| | AS-52/34-550 | AS-52/34-550E | 52/34 | 550 | 42,50 | 164,10 |
| | AS-52/34-800 | AS-52/34-800E | 52/34 | 800 | 59,50 | 231,90 |
| | AS-52/34-1050 | AS-52/34-1050E | 52/34 | 1050 | 76,10 | 301,25 |
| | AS-52/34-6070 | AS-52/34-6070E | 52/34 | 6070 | 411,35 | 1.701,60 |

***Very popular::***

***BGW*-HM16** is a magnet system for fastening C-shaped anchor channels to steel formwork with hammer head locking for secure connection of the anchor rail and magnet system as well as secure adherence to the steel formwork.

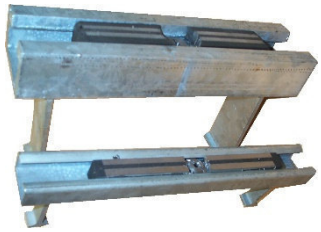

# *BGW*-T-head bolts galvanized and stainless steel including nut

06/18(09/18)

## for Anchor channel type 28/15

| profile | size thread x length mm | galvanized 8.8 | | PU | V4A-70 | | PU |
|---|---|---|---|---|---|---|---|
| 28/15 | | art.-no. | price/100pcs € | | art.-no. | price/100pcs € | |
| 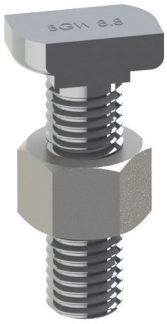 | M 6 x 15 | 56190-6 | 66,00 | 100 | | | |
| | M 6 x 20 | 56190-7 | 66,00 | 100 | | | |
| | M 6 x 25 | 56190-8 | 68,00 | 100 | | | |
| | M 6 x 30 | 56190-9 | 70,00 | 100 | | | |
| | M 6 x 40 | 56190-10 | 72,00 | 100 | | | |
| | M 6 x 50 | 56190-11 | 74,00 | 100 | | | |
| | M 6 x 60 | 56190-12 | 76,00 | 100 | | | |
| | M 8 x 15 | 56190-13 | 53,00 | 100 | | | |
| | M 8 x 20 | 56190-14 | 53,00 | 100 | | | |
| | M 8 x 25 | 56190-2 | 55,00 | 100 | | | |
| | M 8 x 30 | 56190-15 | 57,00 | 100 | 56190-15A4 | 534,00 | 100 |
| | M 8 x 40 | 56190-16 | 63,00 | 100 | | | |
| | M 8 x 50 | 56190-17 | 63,00 | 100 | | | |
| | M 8 x 60 | 56190-18 | 79,00 | 100 | | | |
| | M 8 x 80 | 56190-19 | 135,00 | 100 | | | |
| | M 8 x 100 | 56190-20 | 183,00 | 100 | | | |
| | M 8 x 150 | 56190-21 | 336,00 | 100 | | | |
| | M 10x 15 | 56190-22 | 70,00 | 100 | | | |
| | M 10 x 20 | 56190-23 | 72,00 | 100 | 56190-23A4 | 549,00 | 100 |
| | M 10 x 25 | 56190-24 | 76,00 | 100 | 56190-24A4 | 575,00 | 100 |
| | M 10 x 30 | 56190-25 | 78,00 | 100 | 56190-25A4 | 601,00 | 100 |
| | M 10 x 40 | 56190-1 | 89,00 | 100 | 56190-1A4 | 650,00 | 100 |
| | M 10 x 50 | 56190-26 | 96,00 | 100 | 56190-26A4 | 699,00 | 100 |
| | M 10 x 60 | 56190-27 | 102,00 | 100 | 56190-27A4 | 745,00 | 100 |
| | M 10 x 80 | 56190-28 | 146,00 | 100 | 56190-28A4 | 918,00 | 100 |
| | M 10 x 100 | 56190-29 | 196,00 | 50 | 56190-29A4 | 1210,00 | 50 |
| | M 10 x 125 | 56190-30 | 300,00 | 50 | 56190-30A4 | 1358,00 | 50 |
| | M 10 x 150 | 56190-31 | 365,00 | 50 | 56190-31A4 | 1548,00 | 50 |
| | M 10 x 200 | 56190-32 | 579,00 | 50 | 56190-32A4 | 2086,00 | 50 |
| | M 12 x 30 | 56190-33 | 137,00 | 100 | | | |
| | M 12 x 50 | 56190-34 | 148,00 | 50 | | | |
| | M 12 x 80 | 56190-35 | 163,00 | 50 | | | |

# *BGW*-T-head bolts galvanized and stainless steel including nut

06/18(09/18)

## for Anchor channel 38/17

| profile | size thread x length mm | galvanized 8.8 | | PU | V4A-70 | | PU |
|---|---|---|---|---|---|---|---|
| 38/17 | | art.-no. | price/100 € | | art.-no. | price/100 € | |
| 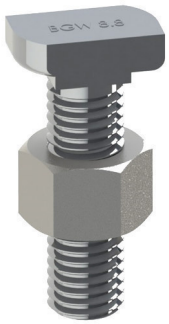 | M 10 x 20 | 56190-36 | 105,00 | 100 | | | |
| | M 10 x 30 | 56190-37 | 107,00 | 100 | 56190-37A4 | 933,00 | 50 |
| | M 10 x 40 | 56190-38 | 115,00 | 100 | 56190-38A4 | 1046,00 | 50 |
| | M 10 x 50 | 56190-39 | 118,00 | 100 | 56190-39A4 | 1080,00 | 50 |
| | M 10 x 60 | 56190-40 | 122,00 | 100 | 56190-40A4 | 1138,00 | 50 |
| | M 10 x 80 | 56190-41 | 165,00 | 50 | | | |
| | M 10 x 100 | 56190-42 | 206,00 | 50 | | | |
| | M 10 x 150 | 56190-43 | 365,00 | 50 | | | |
| | M 12 x 20 | 56190-44 | 113,00 | 100 | | | |
| | M 12 x 30 | 56190 | 118,00 | 100 | 56190A4 | 913,00 | 50 |
| | M 12 x 40 | 56190-45 | 122,00 | 50 | 56190-45A4 | 970,00 | 50 |
| | M 12 x 50 | 56191 | 128,00 | 50 | 56191E | 1043,00 | 50 |
| | M 12 x 60 | 56190-46 | 137,00 | 50 | 56190-46A4 | 1155,00 | 50 |
| | M 12 x 80 | 56190-47 | 148,00 | 50 | 56190-47A4 | 1190,00 | 50 |
| | M 12 x 100 | 56190-48 | 239,00 | 50 | 56190-48A4 | 1592,00 | 50 |
| | M 12 x 125 | 56190-49 | 306,00 | 50 | | | |
| | M 12 x 150 | 56190-50 | 371,00 | 25 | 56190-50A4 | 2539,00 | 25 |
| | M 12 x 200 | 56190-51 | 612,00 | 25 | 56190-51A4 | 2863,00 | 25 |
| | M 16 x 20 | 56190-52 | 161,00 | 50 | | | |
| | M 16 x 30 | 56190-53 | 165,00 | 50 | 56190-53A4 | 1222,00 | 50 |
| | M 16 x 40 | 56191-5 | 167,00 | 50 | 56191-5A4 | 1326,00 | 50 |
| | M 16 x 50 | 56191-1 | 183,00 | 50 | 56191-1A4 | 1468,00 | 50 |
| | M 16 x 60 | 56191-6 | 200,00 | 50 | 56191-6A4 | 1560,00 | 25 |
| | M 16 x 80 | 56190-54 | 232,00 | 25 | 56190-54A4 | 1794,00 | 25 |
| | M 16 x 100 | 56190-55 | 293,00 | 25 | 56190-55A4 | 2014,00 | 25 |
| | M 16 x 125 | 56190-56 | 416,00 | 25 | | | |
| | M 16 x 150 | 56190-57 | 486,00 | 25 | 56191-57A4 | 3132,00 | 25 |
| | M 16 x 200 | 56190-58 | 714,00 | 25 | 56190-58A4 | 3739,00 | 25 |

# *BGW*-T-head bolts galvanized and stainless steel including nut

06/18(09/18)

## for Anchor channel 40/22 and 40/25

| profile | size thread x length mm | galvanized 8.8 | | PU | V4A-70 | | PU |
|---|---|---|---|---|---|---|---|
| 40/22 - 40/25 | | art.-no. | price/100 € | | art.-no. | price/100 € | |
| | M 10 x 20 | 56190-59 | 115,00 | 100 | | | |
| | M 10 x 30 | 56190-60 | 117,00 | 100 | 56190-60A4 | 1959,00 | 25 |
| | M 10 x 40 | 56190-61 | 122,00 | 100 | 56190-61A4 | 2002,00 | 25 |
| | M 10 x 50 | 56190-62 | 124,00 | 100 | 56190-62A4 | 2080,00 | 25 |
| | M 10 x 60 | 56190-63 | 137,00 | 100 | | | |
| | M 10 x 80 | 56190-64 | 323,00 | 50 | | | |
| | M 10 x 100 | 56190-65 | 377,00 | 50 | | | |
| | M 12 x 20 | 56190-66 | 143,00 | 100 | | | |
| | M 12 x 30 | 56190-67 | 144,00 | 100 | 56190-67A4 | 1323,00 | 25 |
| | M 12 x 40 | 56191-4 | 146,00 | 50 | 56191-4A4 | 1465,00 | 25 |
| | M 12 x 50 | 56190-4 | 154,00 | 50 | 56190-4A4 | 1592,00 | 25 |
| | M 12 x 60 | 56190-68 | 161,00 | 50 | | | |
| | M 12 x 80 | 56190-69 | 198,00 | 50 | 56190-69A4 | 1843,00 | 25 |
| | M 12 x 100 | 56190-70 | 222,00 | 50 | 56190-70A4 | 2031,00 | 10 |
| | M 12 x 125 | 56190-71 | 302,00 | 50 | | | |
| | M 12 x 150 | 56190-72 | 412,00 | 50 | 56190-72A4 | 2869,00 | 10 |
| | M 12 x 200 | 56190-73 | 460,00 | 25 | | | |
| | M 16 x 30 | 56190-74 | 195,00 | 50 | 56190-74A4 | 1496,00 | 25 |
| | M 16 x 40 | 56191-3 | 207,00 | 50 | 56191-3A4 | 1603,00 | 25 |
| | M 16 x 50 | 56190-3 | 222,00 | 50 | 56190-3A4 | 1736,00 | 25 |
| | M 16 x 60 | 56190-75 | 226,00 | 25 | 56190-75A4 | 1811,00 | 25 |
| | M 16 x 80 | 56190-76 | 265,00 | 25 | 56190-76A4 | 1964,00 | 25 |
| | M 16 x 100 | 56190-77 | 323,00 | 25 | 56190-77A4 | 2482,00 | 10 |
| | M 16 x 125 | 56190-78 | 384,00 | 25 | | | |
| | M 16 x 150 | 56190-79 | 486,00 | 25 | 56190-79A4 | 3253,00 | 10 |
| | M 16 x 200 | 56190-80 | 624,00 | 25 | 56190-80A4 | 3999,00 | 10 |
| | M 16 x 250 | 56190-81 | 692,00 | 25 | | | |
| | M 16 x 300 | 56190-82 | 839,00 | 25 | | | |

# *BGW*-T-head bolts galvanized and stainless steel including nut



## for Anchor channel 49/30, 50/30 and 52/34

| profile | size thread x length mm | galvanized 8.8 | | PU | V4A-70 | | PU |
|---|---|---|---|---|---|---|---|
| 49/30 - 50/30 - 52/34 | | art.-no. | price/100 € | | art.-no. | price/100 € | |
| | M 10 x 30 | 56190-83 | 245,00 | 100 | | | |
| | M 10 x 40 | 56190-84 | 245,00 | 100 | | | |
| | M 10 x 50 | 56190-85 | 248,00 | 100 | | | |
| | M 12 x 30 | 56190-86 | 209,00 | 100 | 56190-86A4 | 1528,00 | 25 |
| | M 12 x 40 | 56191-9 | 215,00 | 50 | 56191-9A4 | 1543,00 | 25 |
| | M 12 x 50 | 56190-87 | 224,00 | 50 | 56190-87A4 | 1673,00 | 25 |
| | M 12 x 60 | 56190-88 | 232,00 | 50 | | | |
| | M 12 x 80 | 56190-89 | 263,00 | 50 | | | |
| | M 12 x 100 | 56191-7 | 323,00 | 50 | 56191-7A4 | 2516,00 | 25 |
| | M 12 x 125 | 56190-90 | 482,00 | 50 | | | |
| | M 12 x 150 | 56190-91 | 570,00 | 50 | | | |
| | M 12 x 200 | 56190-92 | 776,00 | 25 | | | |
| | M 16 x 30 | 56190-93 | 252,00 | 50 | 56190-93A4 | 2444,00 | 25 |
| | M 16 x 40 | 56190-5 | 258,00 | 50 | 56190-5A4 | 2698,00 | 25 |
| | M 16 x 50 | 56190-94 | 271,00 | 50 | 56190-94A4 | 2875,00 | 25 |
| | M 16 x 60 | 56190-95 | 278,00 | 25 | 56190-95A4 | 2924,00 | 25 |
| | M 16 x 80 | 56190-96 | 317,00 | 25 | 56190-96A4 | 3632,00 | 10 |
| | M 16 x 100 | 56191-8 | 375,00 | 25 | | | |
| | M 16 x 125 | 56190-97 | 482,00 | 25 | | | |
| | M 16 x 150 | 56190-98 | 547,00 | 25 | 56190-98A4 | 4337,00 | 10 |
| | M 16 x 200 | 56190-99 | 661,00 | 25 | | | |
| | M 16 x 300 | 56190-100 | 930,00 | 25 | | | |
| | M 20 x 35 | 56190-101 | 319,00 | 25 | | | |
| | M 20 x 45 | 56190-102 | 323,00 | 25 | 56190-102A4 | 2924,00 | 25 |
| | M 20 x 55 | 56190-103 | 343,00 | 25 | 56190-103A4 | 3141,00 | 25 |
| | M 20 x 65 | 56190-104 | 354,00 | 25 | | | |
| | M 20 x 75 | 56190-105 | 375,00 | 25 | 56190-105A4 | 3583,00 | 25 |
| | M 20 x 100 | 56190-106 | 434,00 | 25 | 56190-106A4 | 3640,00 | 10 |
| | M 20 x 125 | 56190-107 | 577,00 | 25 | 56190-107A4 | 4426,00 | 10 |
| | M 20 x 150 | 56190-108 | 670,00 | 25 | 56190-108A4 | 5059,00 | 10 |
| | M 20 x 200 | 56190-109 | 861,00 | 10 | | | |
| | M 20 x 300 | 56190-110 | 1134,00 | 10 | | | |

# *BGW*-HM16 for fixing anchor channels

06/19(06/19)

Magnet system for fastening C-shaped anchor channels to steel formwork with hammer head locking for secure connection of the anchor channel and magnet system, as well as secure adherence to the steel formwork.

The fixing system consists of a magnetic strip. The magnetic material is neodymium. The magnetic strip is cast in plastic, so that the magnet system is protected and unwanted adhesion to the rail base is avoided.

To fix the anchor channel on the steel formwork, the magnetic strip is inserted into the anchor channel with the non-adhesive side, with a screwdriver or a 5-cent piece twisted the locking element by 90 °, so that it engages behind the profile. To prevent slippage of the magnetic strip in the profile slot, the grub screw in the locking part is screwed in with a 3 mm Allen key until it reaches the anchor channel base. This then sets the magnetic strip in the anchor channel by pressing the locking element against the undercuts of the profile. On this axis, the magnet system then aligns itself to the formwork side.

It is important, before installation in the anchor channel, that the magnetic strip with a thick layer of release agent, the locking element, the thread and the grub screw with a thick layer of grease (against concrete) are protected. The magnetic strip is covered along the entire length, including anchor channel, with a thin adhesive strip, e.g. Packing tape to protect against ingress of concrete. After stripping off, remove the adhesive strips, release the magnet, allow the magnetic strip to adhere to the flat iron and remove it from the anchor rail. Keep the magnet system clean!

## *BGW*-HM16 with a lock inside
## length: 100 mm

| art.-no. | profile type | length | price €/piece |
|---|---|---|---|
| HM16-28/15K-100 | 28/15K | 100 mm | 43,00 |
| HM16-38/17K-100 | 38/17K | 100 mm | 64,00 |

## length: 125 mm

| art.-no. | profile type | length | price €/piece |
|---|---|---|---|
| HM16-HAC-20W | 20W | 125 mm | 52,00 |

## length: 150 mm

| art.-no. | profile type | length | price €/piece |
|---|---|---|---|
| HM16-28/15K-150 | 28/15K | 150 mm | 43,00 |
| HM16-38/17K-150 | 38/17K | 150 mm | 64,00 |
| HM16-40/25K-150 | 40/25K | 150 mm | 75,00 |
| HM16-49/30K-150 | 49/30K | 150 mm | 80,00 |
| HM16-50/30K-150 | 50/30K | 150 mm | 80,00 |
| HM16-53/34K-150 | 53/34K | 150 mm | 85,00 |
| HM16-72/48K-150 | 72/48K | 150 mm | 100,00 |
| HM16-40/22W-150 | 40/22W | 150 mm | 64,00 |
| HM16-50/30W-150 | 50/30W | 150 mm | 80,00 |
| HM16-53/34W-150 | 53/34W | 150 mm | 85,00 |
| HM16-72/48W-150 | 72/48W | 150 mm | 100,00 |
| HM16-HAC-30W-150 | 30W | 150 mm | 82,00 |
| HM16-HAC-40W-150 | 40W | 150 mm | 82,00 |
| HM16-HAC-50W-150 | 50W | 150 mm | 82,00 |

## length: 200 mm

| art.-no. | profile type | length | price €/piece |
|---|---|---|---|
| HM16-28/15K | 28/15K | 200 mm | 46,00 |
| HM16-38/17K | 38/17K | 200 mm | 66,00 |
| HM16-40/25K | 40/25K | 200 mm | 77,00 |
| HM16-49/30K | 49/30K | 200 mm | 82,00 |
| HM16-50/30K | 50/30K | 200 mm | 82,00 |
| HM16-53/34K | 53/34K | 200 mm | 87,00 |
| HM16-72/48K | 72/48K | 200 mm | 102,00 |
| HM16-40/22W | 40/22W | 200 mm | 66,00 |
| HM16-50/30W | 50/30W | 200 mm | 82,00 |
| HM16-53/34W | 53/34W | 200 mm | 87,00 |
| HM16-72/48W | 72/48W | 200 mm | 102,00 |
| HM16-HAC-30W | 30W | 200 mm | 84,00 |
| HM16-HAC-40W | 40W | 200 mm | 84,00 |
| HM16-HAC-50W | 50W | 200 mm | 84,00 |

## *BGW*-HM16 with two latches outside
## length: 240 mm

| art.-no. | profile type | length | price €/piece |
|---|---|---|---|
| HM16-28/15K2-240 | 28/15K | 240 mm | 65,00 |
| HM16-38/17K2-240 | 38/17K | 240 mm | 85,00 |
| HM16-40/25K2-240 | 40/25K | 240 mm | 96,00 |
| HM16-49/30K2-240 | 49/30K | 240 mm | 101,00 |
| HM16-50/30K2-240 | 50/30K | 240 mm | 101,00 |
| HM16-53/34K2-240 | 53/34K | 240 mm | 106,00 |
| HM16-72/48K2-240 | 72/48K | 240 mm | 111,00 |
| HM16-40/22W2-240 | 40/22W | 240 mm | 96,00 |
| HM16-50/30W2-240 | 50/30W | 240 mm | 101,00 |
| HM16-53/34W2-240 | 53/34W | 240 mm | 106,00 |
| HM16-72/48W2-240 | 72/48W | 240 mm | 111,00 |
| HM16-HAC-20W2-240 | 20W | 240 mm | 72,00 |
| HM16-HAC-30W2-240 | 30W | 240 mm | 104,00 |
| HM16-HAC-40W2-240 | 40W | 240 mm | 104,00 |
| HM16-HAC-50W2-240 | 50W | 240 mm | 104,00 |

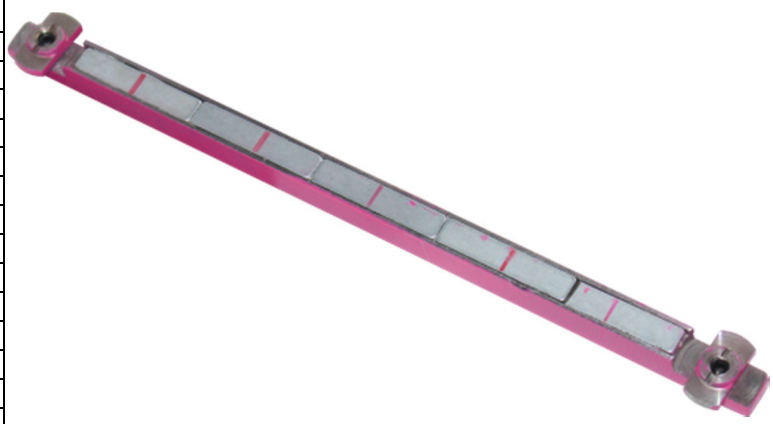

# BGW-Tooth Anchor

03/14(05/13)

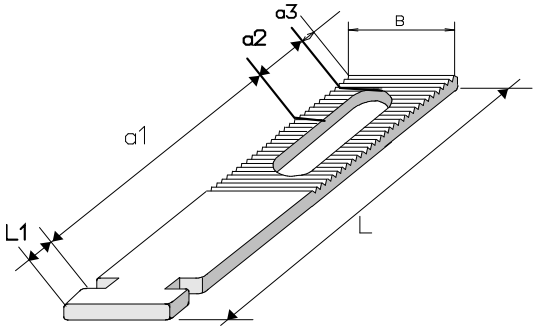


The ***BGW*-Tooth Anchor** serve in connection with anchor rails for example for fixing precast concrete units.

By mean of the tooth-grooves in the anchor and the opposite sheet, a permanent fixing is ensured.

Anchor rails of sizes 28/15, 38/17, 40/25, 49/30, 40/22 and 50/30 can be used.
*Galvanized or stainless steel V4A*

*Declining dimensions and lengths on demand.*

Anchor Channel 40/25
= 40/25 Halfenschienen = 40/25 Jordahl

Anchor Channel 49/30
= 49/30 Halfenschienen = 50/30 Jordahl

**Tooth Anchors for Anchor Channels load 3,5 kN, galvanized / stainless steel**
**Anchor Channel Profile 28/15**
**incl. opposite plate 25 x 25 x 6 mm**

| profile | load pull/kN | art.-no. galvanized | art.-no. stainless steel | length L mm | width B mm | slot b x l mm | thickness mm | a 1 mm | price galvanized €/piece | price stainless steel 1.4571 €/piece |
|---|---|---|---|---|---|---|---|---|---|---|
| 28/15 | 3,5 | 7150 | 7153 | 95 | 25 | 11 x 55 | 6 | 42 | 7,00 | 13,00 |
| | | 7149 | 7152 | 100 | 25 | 11 x 55 | 6 | 47 | 7,03 | 13,00 |
| | | 7154 | 7155 | 110 | 25 | 11 x 55 | 6 | 57 | 7,05 | 13,10 |
| | | 7156 | 7157 | 120 | 25 | 11 x 55 | 6 | 67 | 7,10 | 13,20 |
| | | 7158 | 7159 | 130 | 25 | 11 x 55 | 6 | 77 | 7,15 | 13,25 |
| | | 7160 | 7161 | 140 | 25 | 11 x 55 | 6 | 87 | 7,20 | 13,45 |
| | | 7162 | 7163 | 150 | 25 | 11 x 55 | 6 | 97 | 7,25 | 13,65 |
| | | 7164 | 7165 | 160 | 25 | 11 x 55 | 6 | 107 | 7,30 | 13,90 |
| | | 7166 | 7167 | 170 | 25 | 11 x 55 | 6 | 117 | 7,35 | 14,00 |
| | | 7168 | 7169 | 180 | 25 | 11 x 55 | 6 | 127 | 7,40 | 14,15 |
| | | 7170 | 7171 | 190 | 25 | 11 x 55 | 6 | 137 | 7,45 | 14,35 |
| | | 7172 | 7173 | 200 | 25 | 11 x 55 | 6 | 147 | 7,50 | 14,55 |
| | | 7174 | 7175 | 210 | 25 | 11 x 55 | 6 | 157 | 7,55 | 14,75 |
| | | 7176 | 7177 | 220 | 25 | 11 x 55 | 6 | 167 | 7,60 | 14,85 |
| | | 7178 | 7179 | 230 | 25 | 11 x 55 | 6 | 177 | 7,65 | 15,00 |
| | | 7180 | 7181 | 240 | 25 | 11 x 55 | 6 | 187 | 7,70 | 15,15 |
| | | 7182 | 7185 | 250 | 25 | 11 x 55 | 6 | 197 | 7,75 | 15,30 |

**Tooth Anchor for Anchor channels load 7,0 kN, galvanized / stainless steel**
**Anchor channel profile 38/17**
**incl. opposite plate 30 x 30 x 6 mm**

| profile | load pull/kN | art.-no. galvanized | art.-no. stainless steel | length L mm | width B mm | slot b x l mm | thickness mm | a 1 mm | price galvanized €/piece | price stainless steel 1.4571 €/piece |
|---|---|---|---|---|---|---|---|---|---|---|
| 38/17 | 7,0 | 7100 | 7101 | 95 | 30 | 13 x 50 | 6 | 40 | 8,00 | 15,00 |
| | | 7102 | 7103 | 100 | 30 | 13 x 50 | 6 | 45 | 8,00 | 15,00 |
| | | 7104 | 7105 | 110 | 30 | 13 x 50 | 6 | 55 | 8,05 | 15,05 |
| | | 7106 | 7107 | 120 | 30 | 13 x 50 | 6 | 65 | 8,10 | 15,10 |
| | | 7108 | 7109 | 130 | 30 | 13 x 50 | 6 | 75 | 8,15 | 15,15 |
| | | 7110 | 7111 | 140 | 30 | 13 x 50 | 6 | 85 | 8,20 | 15,20 |
| | | 7060 | 7061 | 145 | 30 | 13 x 50 | 6 | 90 | 8,23 | 15,23 |
| | | 7112 | 7113 | 150 | 30 | 13 x 50 | 6 | 95 | 8,25 | 15,25 |
| | | 7114 | 7115 | 160 | 30 | 13 x 50 | 6 | 105 | 8,30 | 15,30 |
| | | 7116 | 7117 | 170 | 30 | 13 x 50 | 6 | 115 | 8,35 | 15,35 |
| | | 7118 | 7119 | 180 | 30 | 13 x 50 | 6 | 125 | 8,40 | 15,40 |
| | | 7120 | 7121 | 190 | 30 | 13 x 50 | 6 | 135 | 8,45 | 15,45 |
| | | 7122 | 7223 | 200 | 30 | 13 x 50 | 6 | 150 | 8,50 | 15,50 |
| | | 7124 | 7125 | 210 | 30 | 13 x 50 | 6 | 155 | 8,55 | 15,55 |
| | | 7126 | 7127 | 220 | 30 | 13 x 50 | 6 | 165 | 8,65 | 15,65 |
| | | 7128 | 7129 | 230 | 30 | 13 x 50 | 6 | 175 | 8,70 | 15,70 |
| | | 7130 | 7131 | 240 | 30 | 13 x 50 | 6 | 185 | 8,75 | 15,75 |
| | | 7132 | 7183 | 250 | 30 | 13 x 50 | 6 | 200 | 8,80 | 15,80 |
| | | 7123 | 7240 | 280 | 30 | 13 x 50 | 6 | 225 | 8,90 | 15,90 |
| | | 7133 | 7134 | 300 | 30 | 13 x 50 | 6 | 250 | 9,15 | 16,15 |
| | | 7241 | 7242 | 325 | 30 | 13 x 50 | 6 | 275 | 9,40 | 16,40 |
| | | 7243 | 7244 | 350 | 30 | 13 x 50 | 6 | 300 | 9,75 | 16,75 |

# BGW-Tooth Anchor



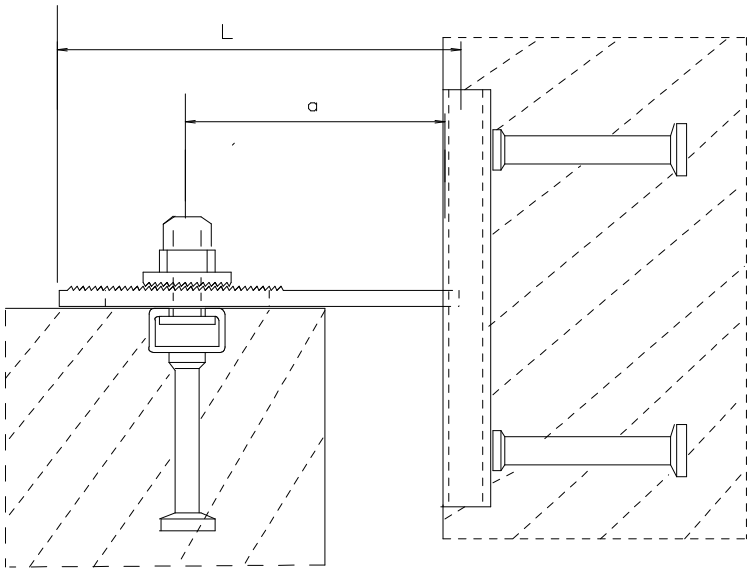


**Tooth Anchor for Anchor Channels load 8,0 kN, galvanized**
**Anchor Channel Profile 40/22, 40/25**
**incl. opposite plate 40 x 40 x 6 mm**

| profile | load pull/kN | art.-no. galvanized | art.-no. stainless steel | length L mm | width B mm | slot b x l mm | thickness mm | a 1 mm | price galvanized €/price |
|---|---|---|---|---|---|---|---|---|---|
| 40/22 | 8,0 | 7250 | 7251 | 95 | 40 | 17 x 50 | 6 | 30 | 9,25 |
| | | 7252 | 7253 | 100 | 40 | 17 x 50 | 6 | 35 | 9,30 |
| | | 7254 | 7255 | 110 | 40 | 17 x 50 | 6 | 45 | 9,40 |
| | | 7256 | 7257 | 120 | 40 | 17 x 50 | 6 | 55 | 9,50 |
| | | 7258 | 7259 | 130 | 40 | 17 x 50 | 6 | 65 | 9,60 |
| | | 7260 | 7261 | 140 | 40 | 17 x 50 | 6 | 75 | 9,70 |
| | | 7262 | 7263 | 150 | 40 | 17 x 50 | 6 | 85 | 9,80 |
| | | 7264 | 7265 | 160 | 40 | 17 x 50 | 6 | 95 | 9,90 |
| | | 7266 | 7267 | 170 | 40 | 17 x 50 | 6 | 105 | 10,00 |
| | | 7268 | 7269 | 180 | 40 | 17 x 50 | 6 | 115 | 10,10 |
| | | 7270 | 7271 | 190 | 40 | 17 x 50 | 6 | 125 | 10,25 |
| | | 7272 | 7273 | 200 | 40 | 17 x 50 | 6 | 135 | 10,35 |
| | | 7274 | 7275 | 210 | 40 | 17 x 50 | 6 | 145 | 10,45 |
| | | 7276 | 7277 | 220 | 40 | 17 x 50 | 6 | 155 | 10,55 |
| | | 7278 | 7279 | 230 | 40 | 17 x 50 | 6 | 165 | 10,65 |
| | | 7280 | 7281 | 240 | 40 | 17 x 50 | 6 | 175 | 10,75 |
| | | 7282 | 7283 | 250 | 40 | 17 x 50 | 6 | 185 | 10,85 |

## *BGW*-Opposite Plate for Tooth Anchor

| for Anchor Channel | l x b | borehole | thick-ness | galvnized | | stainless steel V4A | |
|---|---|---|---|---|---|---|---|
| | mm | Ø mm | mm | art.-no. | €/piece | art.-no. | €/piece |
| 28/15 | 25 x 25 | 11 | 6 | 7286 | 2,00 | 7293 | *on demand* |
| 38/17 | 30 x 30 | 13 | 6 | 7287 | 3,00 | 7294 | |
| 40/22 | 40 x 40 | 17 | 6 | 7291 | 4,00 | 7299 | |

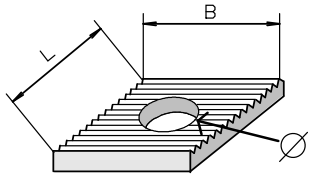

# *BGW*-connection loop

04/18(04/18)

**Made of flexible wire rope. For joining prefabricated concrete into grouting grooves.**

The BGW connection loop is used to connect precast concrete elements. BGW connection loops re-establish themselves after each impact. Thus, precast concrete parts can be easily and easily installed. The subsequent bending out of fasteners is no longer necessary. After installation, it is essential to seal the joints with shrink-free mortar to ensure functionality.

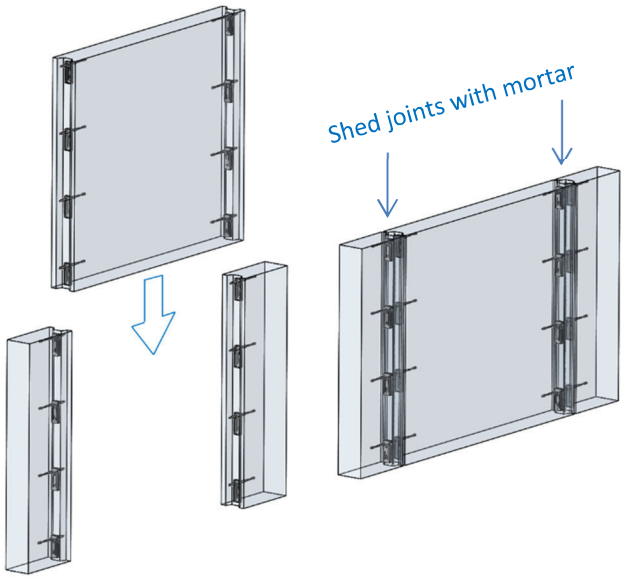


***Advantages***

- Flexible connecting elements, which allows small grouting joints
- Secure grouting with flowable and shrink-free mortar
- No complicated „inverted bending“ required
- Simple planning, as the main reinforcement does not have to be changed
- Anchoring is also possible in thin walls
- Special designs for lightweight concrete available
- Sturdy cover is also quitable for hot gluing
- The structured surface ensures adhesion with the concrete

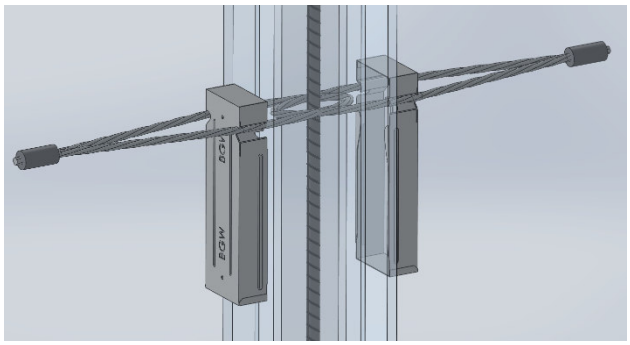

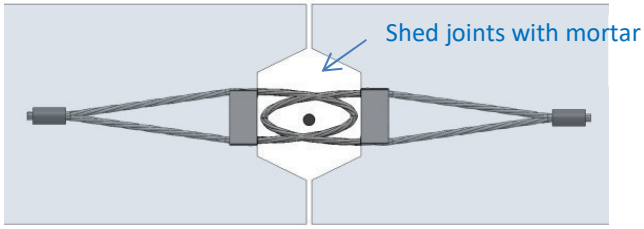

When installing the connection loop, the storage box with the closed side is attached to the formwork element. For nailing, there are two nail holes in the storage box.

The storage box could also be attached to the formwork with magnets or hot glue. When assembling the finished parts of the storage box is opened, the wire rope loop pulled out of the storage box until it is angled.

The wire rope of the wire rope loop has a diameter of 6 mm. The strength of the wires is 1770 n / mm². The connection loop of the wire rope is protected in a storage box made of sheet metal from concrete. This is closed from the top with a waterproof material.

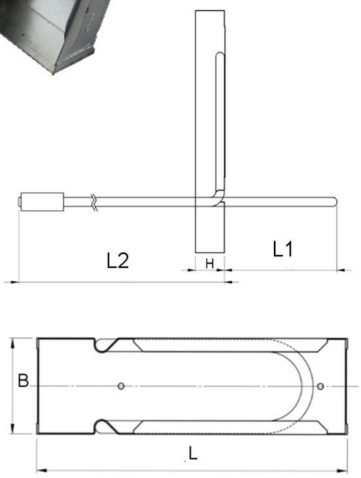


| art.-no. | L1 mm | L2 mm | H mm | B mm | L mm | wire rope Ø mm | price €/pcs |
|---|---|---|---|---|---|---|---|
| 4783 | 80 | 215 | 25 | 50 | 160 | 6 | 2,05 |
| 4781 | 100 | 215 | 25 | 50 | 160 | 6 | 2,25 |
| 4785 | 120 | 215 | 25 | 50 | 160 | 6 | 2,45 |

# BGW-Bracket Lock

08/19(08/19)

With a BGW-Bracket Lock, precast concrete components such as concrete walls or concrete pipes are bolted together on the construction site. The radius of the lock body halves is adapted to the fasteners and allows even force distribution on the bracket. Different distances of the brackets are compensated by suitable screw lengths.

## Advantages

- **High safety through uniform force transmission in the conrete and in the connecting elements**
- **Simple and secure attachment**
- **Detachable screw connection**
- **Suitable for all distances of the stirrups**
- **Wall offset correction and compensation**
- **As a positive connection and / or expansion joint possible**

**Static calculations for this**:
http://www.bgw-bohr.de/pdf/Statik-Stand-18-09-13.pdf

**See our Installation-Video:**
http://bgw-bohr.de/Montagevideo-buegelschloss.htm

**Mounting set BGW-Bracket Lock in the bag**
(per Set: 2 pcs. Semicircular lock body and 2 pcs. screws)

| art.-Nr. | material | price €/piece |
|---|---|---|
| 44173B | bare | 7,20 |
| 44173V | galvanized | 8,80 |
| 44173E | stainless steel | 11,70 |

**BGW-lock body, semicircular**
(two pieces per Bracked Lock needed)

| art.-no. | material | length l [mm] | width b [mm] | heigth h [mm] | weight kg/piece | price €/piece |
|---|---|---|---|---|---|---|
| Halbmond-B | S355, bare | 20 | 40 | 40 | 0,17 | 2,50 |
| Halbmond-V | S355, galvanized | 20 | 40 | 40 | 0,17 | 3,20 |
| Halbmond-E | V2A, stainless steel | 20 | 40 | 40 | 0,17 | 4,30 |

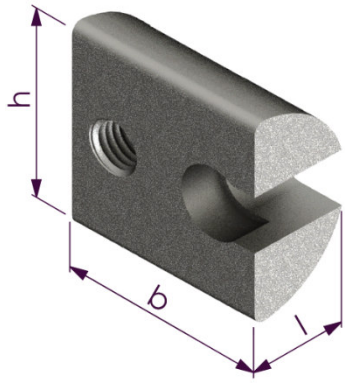


**BGW- Bracket Lock Bolt M10 with centering ring**
(two pieces per Bracket Lock needed)

| art.-no. | material | length l [mm] | weight kg/piece | price €/piece |
|---|---|---|---|---|
| 562562 | 8.8, bare | 80 | 0,065 | 0,35 |
| 562561 | 8.8, galvanized | 80 | 0,065 | 0,45 |
| 562561E | V2A, stainless steel | 80 | 0,065 | 0,80 |

**Ratchet wrench SW17**

| art.-no. | material | weight kg/Pcs | price €/pcs |
|---|---|---|---|
| 16925 | Chrom Vanadium | 0,2 | 35,00 |

When assembling precast concrete elements, it is possible to partially correct an axial offset of the walls with the BGW Bracket Lock. If an offset is desired or no longer correctable, this is easily compensated by the semicircles of the Bracket Lock. The complete thread length of the Bracket Lock is used so that the ripping of individual threads is excluded.

For deviations, or expected offset is proposed instead of using rigid wire flexible wire ropes.

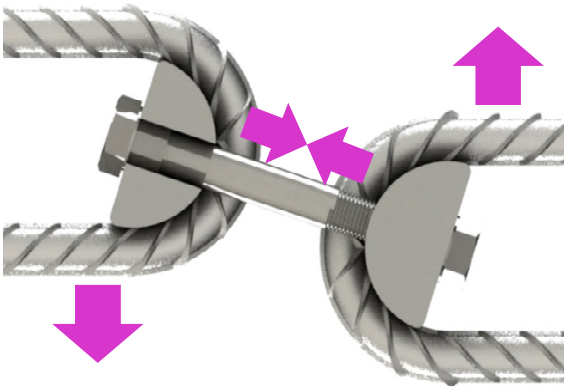

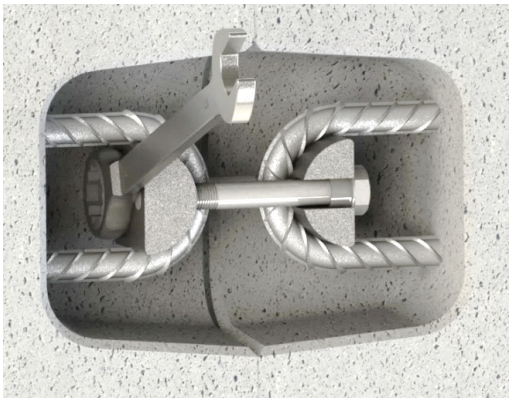

# *BGW-Bracket Lock*

09/18(10/18)

With BGW-Bracket Lock it is possible to connect the walls at the front, or at any angle as a corner joint or T-joint.

**straight abutment**
axial power transmission
up to 6,6t

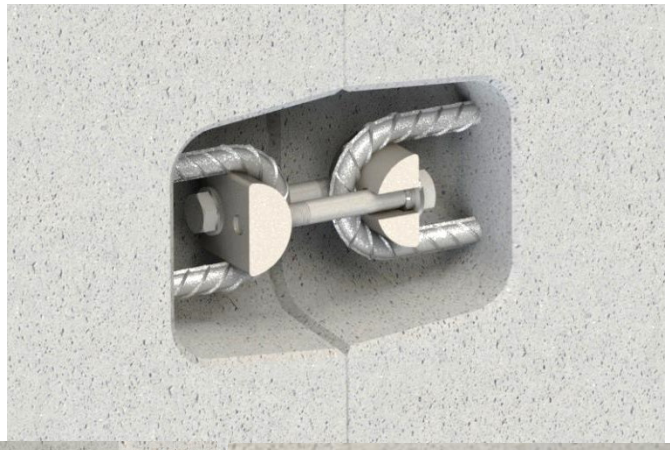

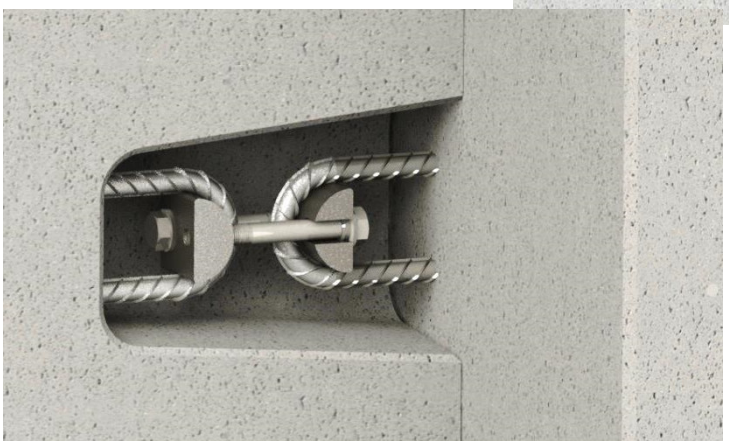

**corner or T-joint**
axial power transmission
up to 6,6t

**corner or T-joint with connection loop**
axial power transmission up to 4,0t

The **BGW-Bracket Lock U-bolt** is embedded in the precast concrete elements and is specially adapted to the *BGW*-Turnbuckle.

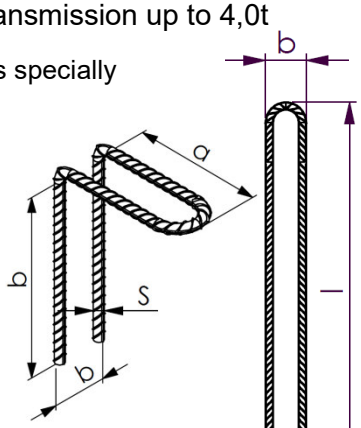


**BGW-Bracket Lock U-bolt form rebar B500B**
Axial power transmission up to 6,6t. For concrete classes of C12/15 till C50/60

| art.-no. | material | description | length l [mm] | width b [mm] | bar Ø s [mm] | weight kg/piece | price €/piece |
|---|---|---|---|---|---|---|---|
| 44171 | B500B | straight | 710 | 60 | 10 | 0,90 | 2,20 |
| 44171V | B500B, galvanized | straight | 710 | 60 | 10 | 0,96 | 3,16 |
| 44172 | B500B | angle 90° | 710 (a+b) | 60 | 10 | 0,90 | 2,31 |
| 44172V | B500B, galvanized | angle 90° | 710 [a+b) | 60 | 10 | 0,96 | 3,27 |

**BGW-connection loop with wire rope Ø 6 mm, Loop length L1 = 80mm**
axial power transmission up to 4,0t. The strength of the wire loop is 1770 N/mm²

| art.-no. | length L1 [mm] | length L2 [mm] | hight H [mm] | width B [mm] | length L [mm] | weight kg/piece | price €/piece |
|---|---|---|---|---|---|---|---|
| 4783 | 80 | 215 | 25 | 50 | 160 | 0,20 | 2,05 |

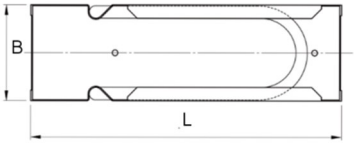


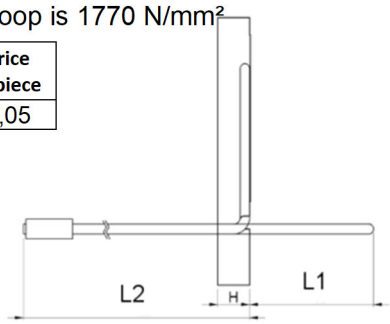

**BGW**-Bohr GmbH – 97854 Steinfeld – Tel. 09359/90950 – Fax. 09359/1640 – www.bgw-bohr.de

# *BGW-Bracket Lock*



## BGW- Bracket Lock Pocket former and accessories

In order to fix the brackets before concreting and to create recesses in the precast concrete part for the *BGW*-Bracket Lock, a ***BGW*-Bracket Lock Pocket former** is needed. The *BGW*-Bracket Lock Pocket former is fastened to the formwork together with the BGW-Bracket Lock U-bolt before concreting. The pocket former can be unfolded in the middle and is thus easily detached from the brackets. **BGW-Bracket Lock Pocket former can be adapted to all customer specific requirements.**

### BGW-Bracket Lock Pocket former made of PU

| art.-no. | description | length L [mm] | width b [mm] | height h [mm] | weight kg/piece | price €/piece |
|---|---|---|---|---|---|---|
| 16921 | straight | 83 | 114 | 63 | 0,378 | 25,00 |
| 16926 | corner | 183 | 124 | 80 | 1,290 | 50,00 |

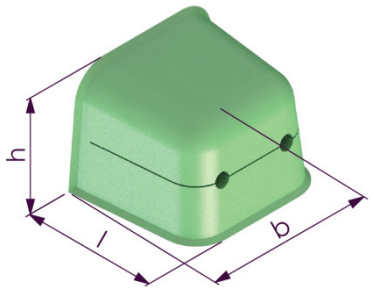


### BGW- float made of PU / wood

(casting template for 90° bars)

| art.-no. | length L [mm] | width b [mm] | height h [mm] | weight kg/piece | price €/piece |
|---|---|---|---|---|---|
| 16927 | 275 | 200 | 110 | 1,705 | 57,50 |

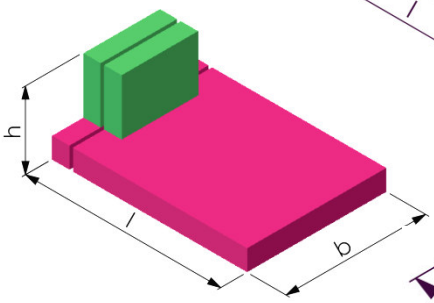


### BGW- Claw for Pocket former

tool for easy removal of the pocket former

| art.-no. | length L [mm] | width b [mm] | height h [mm] | weight kg/piece | price €/piece |
|---|---|---|---|---|---|
| 16924 | 180 | 88 | 35 | 0,2 | 25,00 |

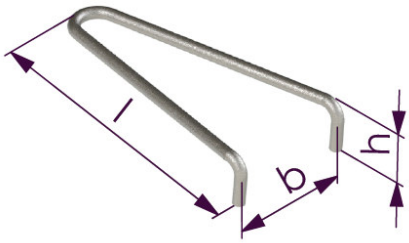


A *BGW*-holding plate is used to attach *BGW*-Bracket Lock pocket former to the formwork. Variants are offered for nailing to the wooden formwork or for the magnetic fixation on the steel formwork.

### BGW-holding plate for Pocket former – for wood formwork made of steel (attachment with nails)

| art.-no. | length l [mm] | width b [mm] | height h [mm] | weight kg/piece | price €/piece |
|---|---|---|---|---|---|
| 16922 | 30 | 80 | 60 | 0,1 | 8,80 |

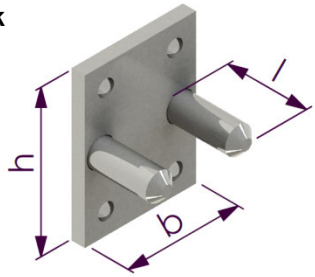


### BGW-holding plate for Pocket former – for steel formwork made of steel (attachment with magnets)

| art.-no. | length l [mm] | width b [mm] | height h [mm] | weight kg/piece | price €/piece |
|---|---|---|---|---|---|
| 16923 | 30 | 60 | 60 | 0,25 | 64,00 |

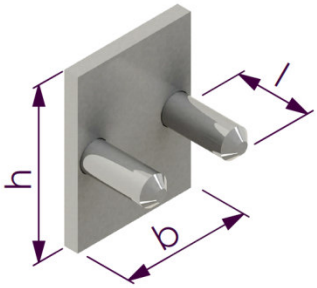


### BGW-Cover for Bracket Lock recess made of fiber

This closed recesses can be opened again for a subsequent control of the connection without much effort.

| art.-no. | type | length l [mm] | width b [mm] | height h [mm] | weight kg/pcs | price €/piece |
|---|---|---|---|---|---|---|
| 16928 | straight abutment | 9 | 82 | 116 | 0,170 | 3,95 |
| 16929 | straight abutment | 9 | 163 | 116 | 0,340 | 4,60 |
| 16930 | corner or T-joint | 10 | 180 | 126 | 0,360 | 4,95 |

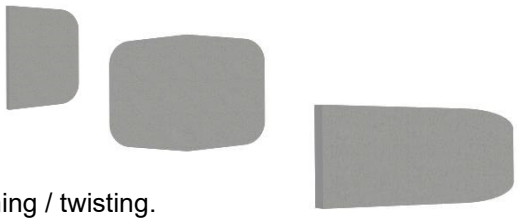

**BGW- Sealing wax** for the screws to determine unauthorized loosening / twisting.

| art.-no. | designation | price €/piece |
|---|---|---|
| 80019-1 | Sealing wax | 14,50 |

# Mounting Instruction

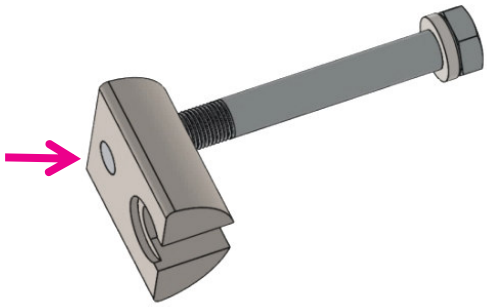

1. Screw screw into Lock body

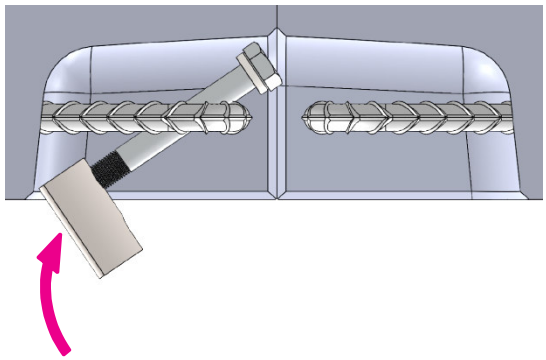

2. Insert first half of the lock behind the U-bolt

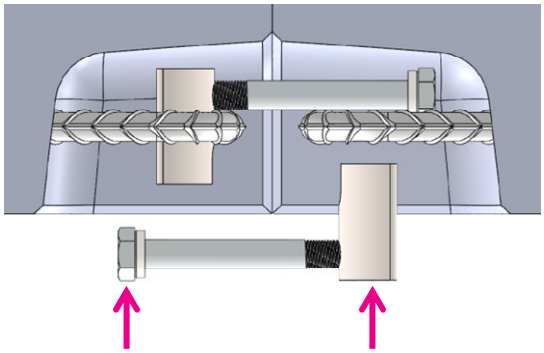

3. Hook the second half of the screw lock into the first on

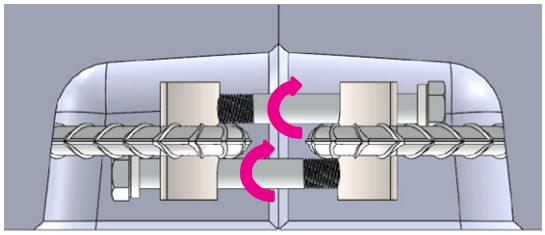

4. Screw both wrench halfes together with your fingers

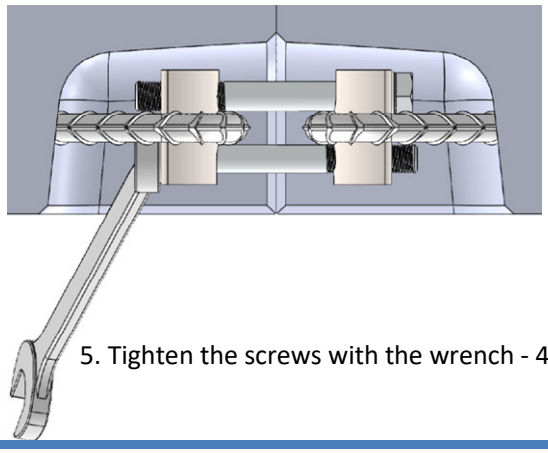

5. Tighten the screws with the wrench - 40Nm

See our Installation-Video:
**http://bgwbohr.de/Montagevideo-buegelschloss.htm**

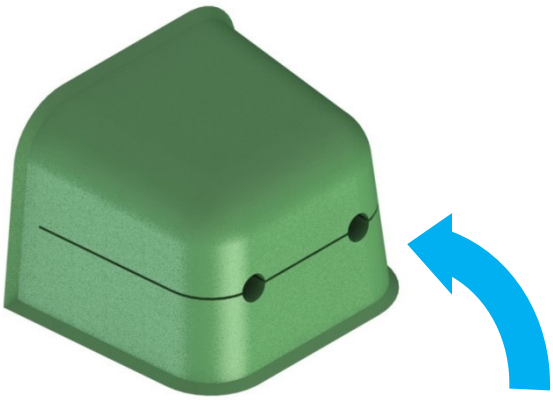

**Apply release agent to the pocket former before use**

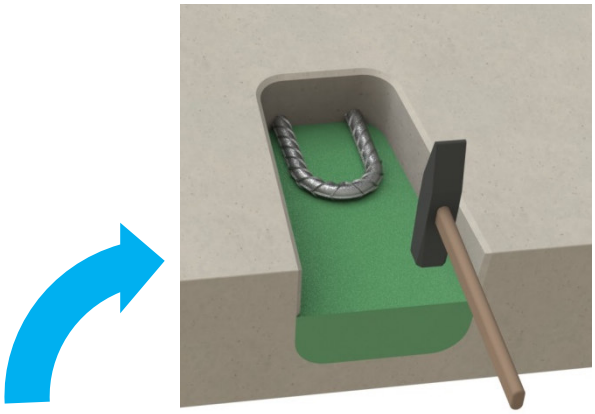

**Slight hammer blows on the recess body can facilitate demolding**

# *BGW*-Anchor lock

09/18(09/18)

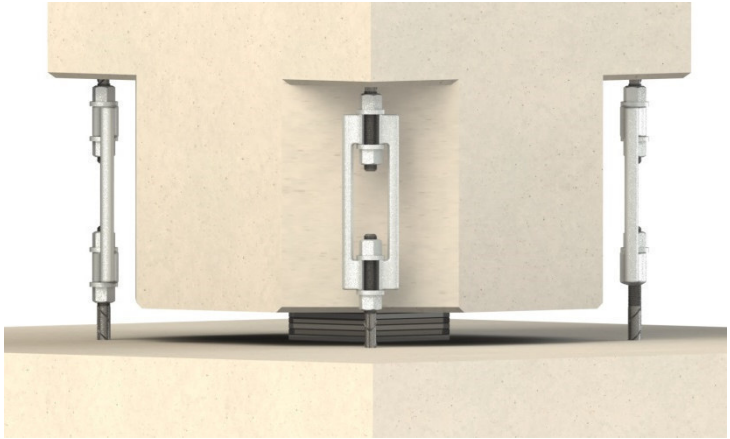

With the ***BGW*-Anchor lock** precast concrete parts that have the thread with a connecting means can be releasably connected to each other. It can be screwed together with external threads, internal threads and a combination of male and female threads of the same load group. The *BGW*-Anchor lock is excellently suited to create rigid connections of concrete components and to additionally build up prestress between the precast concrete elements. This can be used in building construction precast columns, beams or bars are mounted. It is also ideal for clamping pipes, manholes, wall slabs, angle support walls, walls and chimney elements. The construction of the connection is simple and does not hinder the construction of the reinforcement in the precast concrete part. Each Anchor lock is screwed on both sides. This allows flexibility in assembly and allows to compensate for inaccuracies in part. The axial power transmission is up to 2,4 tons.

## Advantages:

- **fixing with preload**
- **easiest installation**
- **Wall offset correction and compensation**
- **Detachable screw connection**
- **various applications**

**Easiest installation**

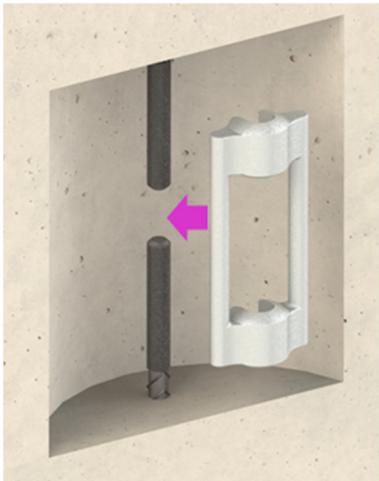

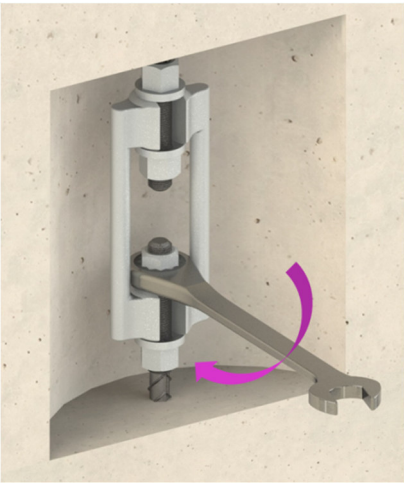

**Wall offset correction and compensation**

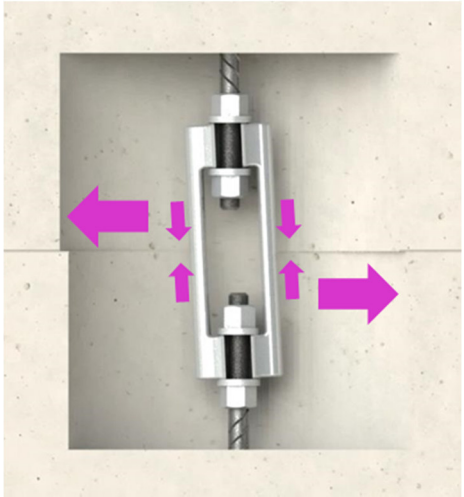

**excellent bending stiffness**

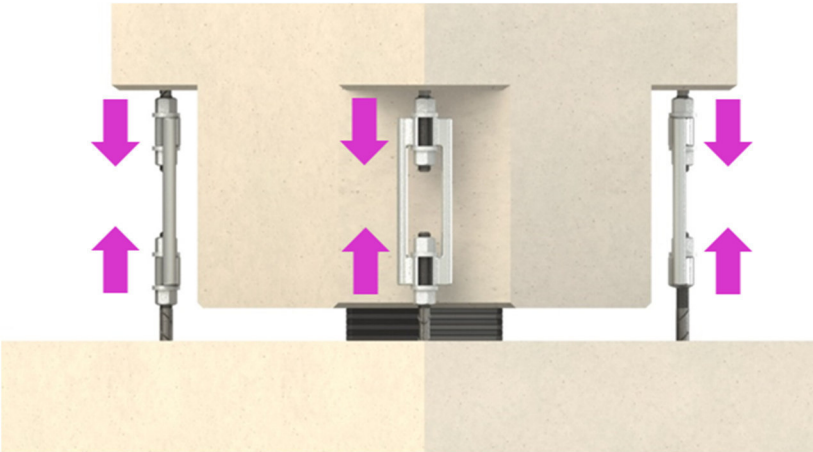

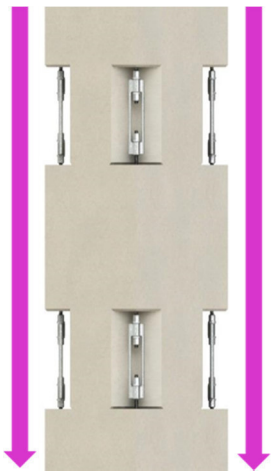

# *BGW*-Anchor lock - Pocket former

09/18(09/18)

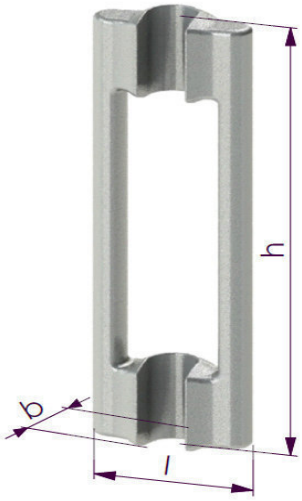


## BGW-Anchor lock, galvanized

| art.-no. | length l [mm] | width b [mm] | height h [mm] | weight kg/piece | price €/piece |
|---|---|---|---|---|---|
| 610001 | 50 | 26 | 154 | 0,387 | 5,20 |

## DIN 6331 Hex nut M12 with Collar, lowered

| art.-no. | weight kg/piece | price €/piece |
|---|---|---|
| 562691 | 0,028 | 1,23 |

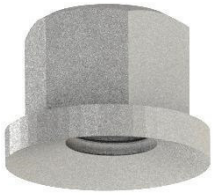

## BGW- Reinforcement connection with external thread

| art.-no. | length l [mm] | nominal Ø d [mm] | thread M | thread length e [mm] | pack.-unit piece | weight kg/piece | price €/piece |
|---|---|---|---|---|---|---|---|
| 70010750 | 750 | 10 | 12 | 80 | 50 | 0,480 | 5,19 |

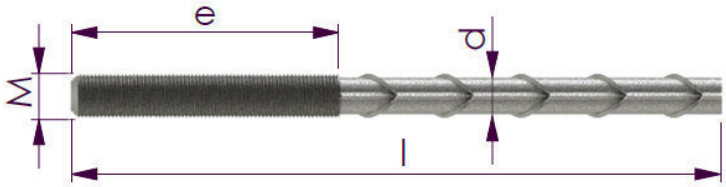


## Ratchet wrench SW19

| Art.-Nr. | Material | Gewicht kg/Stück | Preis €/Stück |
|---|---|---|---|
| 16925-19 | Chrom Vanadium | 0,3 | 37,00 |

## BGW-Anchor lock – Pocket former

To create recesses in the precast concrete part for the *BGW*-Anchor lock, a *BGW*-Anchor lock pocket former is required. The *BGW*-Anchor lock pocket former is fastened to the formwork together with the *BGW* reinforcement connection before concreting. The pocket former can be folded apart in the middle and is therefore easy to remove.

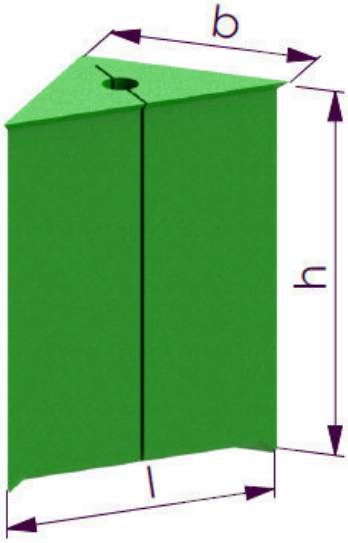


### BGW-Anchor lock – Pocket former

| art.-no. | length l [mm] | width b [mm] | height h [mm] | weight kg/piece | price €/piece |
|---|---|---|---|---|---|
| 16926 | 117 | 166 | 177 | 1,2 | 25,00 |

## BGW-Position template for pocket former

| art.-no. | length l [mm] | width b [mm] | height h [mm] | weight kg/piece | price €/piece |
|---|---|---|---|---|---|
| 16927 | on demand | | | | |

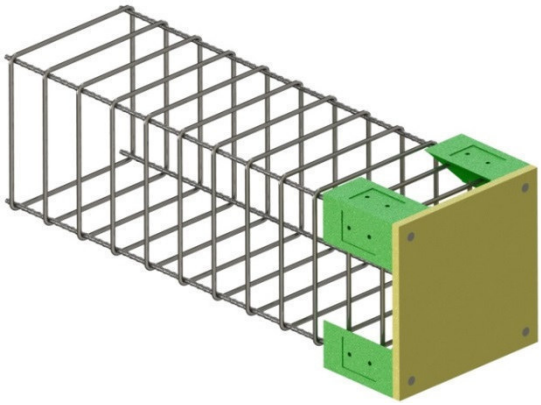

## BGW-Pocket former holding plate

09/18(09/18)

To attach BGW-Anchor lock Pocket former to the formwork, a BGW holding plate is used.
Variants are offered for nailing to the wooden formwork or for magnetic fixation on the steel formwork.

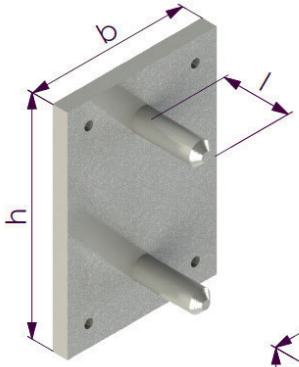


### BGW-Pocket former holding plate for wooden formwork (attachment with nails)

| art.-no. | length l [mm] | width b [mm] | height h [mm] | weight kg/piece | price €/piece |
|---|---|---|---|---|---|
| 16928 | 30 | 70 | 100 | 0,25 | 8,80 |

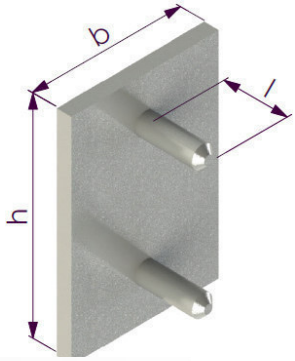


### BGW-Pocket former holding plate for metal formwork (attachment with magnets)

| art.-no. | length l [mm] | width b [mm] | height h [mm] | weight kg/piece | price €/piece |
|---|---|---|---|---|---|
| 16929 | 30 | 70 | 100 | 0,25 | 64,00 |

# *BGW*-Anchor System for wooden precast – Drive-In Nut

08/17(08/17)

The manually operated load handling device is used for the safe and easy lifting of wooden components of all kinds.

**How the system works:**

- make pilot hole through the finished part
- Insert the anchor into the pilot hole and hammer in the hooks
- Insert anchor securing bolts
- Lead the lifting loop through the drilled hole and screw it into the transport anchor until the thread of the lifting loop protrudes from the impact anchor
- lift the load
- release the anchor

**To note is:**

- When hitting a crane hook, make sure that it can not damage the wire rope
- After the finished part has been raised a few cm, it must be checked while pending that the finished part is still hanging
- Users should be trained before the first start
- Weights of the components to be lifted must be known and permissible
- According to the safety rules, only associated lifting anchors and load handling devices of the same manufacturer may be used
- Only the lifting devices specified in the operating instructions may be used

# *BGW* HFA – Drive-In Nut, blank

08/17(08/17)

***BGW*-Anchor System for wooden precast**

**Report:**
http://bgw-bohr.de/pdf/Holzfertigteilanker/Einschlaganker_Bericht_MFPA_2014-02-10_1.pdf

The transport anchor has traditionally been around four staples with which the anchor is struck on the finished part. For further attachment, two additional holes can be used in the transport anchor. The BGW Drive-In Nut can be installed both with the staple to the wood, as well as vice versa. The second variant offers the advantage that no pre-drilling is necessary for the threaded pin.

| art.-no. | load t | diameter | thread | PU piece | weight | price €/piece |
|---|---|---|---|---|---|---|
| 55176-000 | 0,5 | 60 x 3 | M 12 | 1000 | 0,068 | 0,88 |
| 55176-001 | 1,2 | 60 x 3 | M 16 | 1000 | 0,074 | 0,92 |
| 55176-002 | 2,0 | 60 x 3 | M 20 | 1000 | 0,072 | 0,96 |

# *BGW*-Lifting Loops - fitted

So that the lifting loop can be screwed more easily through the prefabricated part with the transport anchor this is summarized centrally with a crimping clamp. The central compression facilitates screwing the lifting loop into the transport anchor, as this also serves as a guide in the finished part.

***Please note:***
The thread of the rope loop must always be screwed in to the end of the rope loop. Cable loops must be replaced in the event of wire breaks, damage to the thread, bruising, corrosion scars or kinking.

Assessment at least once a year by an expert (UVV VBG 9a § 42).

| art.-no. | load t | loop height mm | thread | PU piece | weight | price €/piece |
|---|---|---|---|---|---|---|
| 0651S 455 | 0,5 | 455 | M 12 | 50 | 0,162 | 8,50 |
| 0654S 455 | 1,2 | 455 | M 16 | 50 | 0,291 | 11,00 |
| 0654S 500 | 1,2 | 500 | M 16 | 50 | 0,325 | 12,50 |
| 0659S 455 | 2,0 | 455 | M 20 | 50 | 0,452 | 15,50 |

# BGW-Timber Transport Screw System

09/17(09/17)

The transport anchor system allows a safe and easy lifting of wooden components of all kinds.

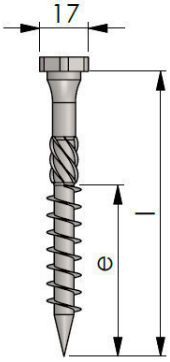

**How the system works:**

- Screw the screw without a pilot hole
- Anchor the anchors
- Lift the load
- Loosen the anchor

**Please note:**

- Transport Anchor Screw may only be used once
- Read operating instructions in detail before using
- Users must be trained before the first commissioning
- Weights of the components to be lifted must be known and permitted
- Only the lifting devices specified in the operating instructions may be used

### *BGW*-Timber Transport Screw

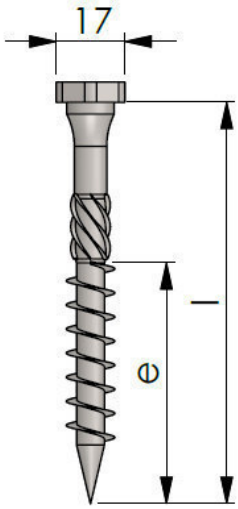


| art. – no. | b mm | length mm | thread length mm | VPE | price €/piece |
|---|---|---|---|---|---|
| 55176-100-100 | 12,0 | 100 | 60 | 50 | 0,64 |
| 55176-100-140 | | 140 | 80 | 50 | 0,75 |
| 55176-100-220 | | 220 | 120 | 50 | 1,32 |
| 55176-100-300 | | 300 | 120 | 50 | 2,18 |
| 55176-100-320 | | 320 | 120 | 50 | 2,27 |

### *BGW*-Lifting Shackle

The manually operated load receiving device made of quality steel is used for the safe and easy lifting of wooden components of all kind.

| art.-no. | load t | kg / piece | price €/piece |
|---|---|---|---|
| 1510 | 1,0 – 1,3 | 0,70 | 73,60 |

# *BGW*-installation instruction for *BGW*-anchor with data head

05/03(03/14)

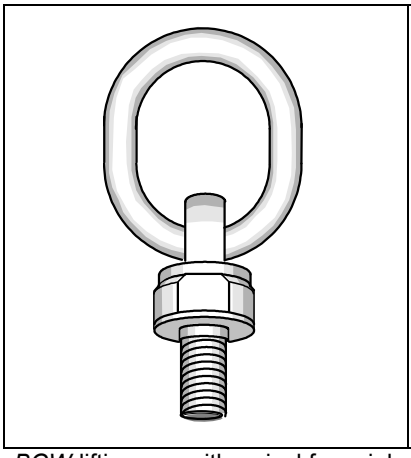

*BGW*-lifting eye with swivel for axial and diagonal lift.
Grease the thread well.

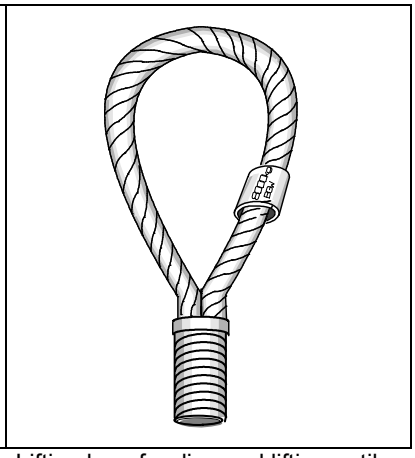

Lifting loop for diagonal lifting until 45°.
Screw the loop until the ground of the socket. Grease the thread well.

Minimum reinforcement for all concrete parts with thread M/Rd12, M/Rd14 and M/Rd16:
two mats Q 131 (150 x 5 mm). with thread M/Rd18, M/Rd20, M/Rd24, M/Rd30, M/Rd36, M/Rd42, M/Rd52:
two mats Q 188 (150 x 6 mm).
Additional reinforcement part at axial- and diagonal lift.

Before the installation into the concrete part, a view control has to be made. It has to be checked whether:
a) the thread works
b) the cross-hole
c) the reinforcement bar
d) the stopper
is damaged.

Lifting loops have tob e changed at:
a) if the rope is damaged
b) if the thread part is damaged
(be bend by diagonal lift, etc.)

The connection with the shell runs through screws. Plastic holding plates. Against contamination of the threads are to be used.
The load tables are based on two concrete cube crushing strengths: 15 N / mm² and 25 N / mm².
For the young concrete with 15 N / mm², the transverse tension brackets according to the table are required for the transverse tension.
For the already hardened pressure of 25 N / mm², the compressive strength and compressive strength are not negligible.

# *BGW*-lifting loop Goliath with forged head

**Diagonal lable**

| thread M/Rd | load t | axial pull 0° t | diagonal pull till 45° without diagonal pull clip t | diagonal pull till 90° without diagonal pull clip t |
|---|---|---|---|---|
| 12 | 0,5 | 0,5 | 0,50 | 0,250 |
| 16 | 1,2 | 1,2 | 0,65 | 0,325 |
| 20 | 2,0 | 2,0 | 0,80 | 0,400 |
| 24 | 2,5 | 2,5 | 0,85 | 0,425 |
| 30 | 4,0 | 4,0 | 2,10 | 1,050 |
| 36 | 6,3 | 6,3 | 3,00 | 1,500 |
| 42 | 8,0 | 8,0 | 4,60 | 2,300 |
| 52 | 12,5 | 12,5 | 6,60 | 3,300 |

***The values always correspond to the appropriate lifting anchor system for concrete elements depending on the built-in transport anchor.***

# Additional reinforcements for transverse and diagonal pull

05/03(04/10)

**Static proof of the diagonal tensile reinforcement for BGW –waved end fixing insert**

**1. Basics**
**Calculation basis:**

| | |
|---|---|
| DIN 0145-1 | reinforced concrete |
| BGR 106 | Safety rules for transport anchors of precast concrete elements |

| | | |
|---|---|---|
| **Material:** | rebar | BST 500/550 |
| | concrete | C12/15 |

**System:** The waved end fixing insert are used as an anchoring element with internal thread in load-bearing precast concrete elements made of C12 / 15. The installation is orthogonal to the concrete surface.
Waved end fixing inserts can be stressed with centric tensile loads, diagonal and transverse tensile loads.

In the case of an oblique tensile stress (ß[45°), reinforcement loops inclined by 15 ° to the surface must be installed according to the diagram.

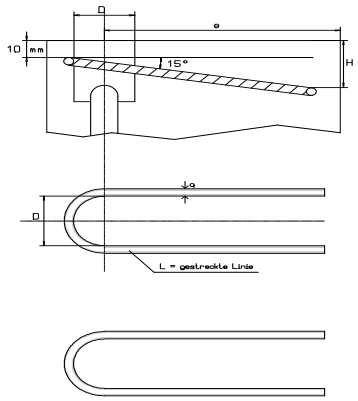


# Additional reinforcements for transverse and diagonal pull

**Static proof of the diagonal tensile reinforcement for BGW –waved end fixing insert**

**Variables:**

| | |
|---|---|
| $A_s$ | Cross-sectional area of the diagonal tensile reinforcement (2 legs) |
| $b_A$ | Width of the pocket former |
| $d_{br}$, D | Diameter of the waved end fixing insert eyelet |
| $d_s$, q | Diameter of the diagonal tensile reinforcement |
| H | Edge distance of the diagonal tensile reinforcement at the loop end |
| $l_b$ | Composite length of the reinforcement leg |
| $l_s$ | Length of a reinforcement leg |
| l | Total length of the diagonal tensile reinforcement (settlement) |
| $f_{b,k}$ | characteristic value of the bond stress |
| $f_{b,zul}$ | Value of the permissible bond stress |
| $f_{ctk,0.05}$ | characteristic value of the concrete tensile strength |
| $f_{sk}$ | characteristic value of the yield strength of reinforcing steel |
| $f_{s,zul}$ | Value of the admissible reinforcing steel stress |
| ß | Angle of the diagonal tensile force to the vertical (anchor axis) |
| $\gamma$ | Global safety factor |
| zul S | permissible diagonal tensile force (ß[45°) |
| $Z_S$ | Force in the direction of the diagonal tensile reinforcement |

**Security concept:**
On the basis of BGR 106, we apply the global safety concept, which provides a global safety margin between the characteristic material parameters and the permissible variables.

In the case of resistance to concrete failure, including failure of the load-bearing capacity of the reinforcement cross-section and anchoring, the global safety factor is

$$\gamma = 250$$

**Materials characteristics:**
The load safety proof is based on the following permissible material parameters:
Permissible reinforcing steel stress for reinforcing steel BSt 500:

$$f_{s,zul}=f_{yk}/\gamma=500/2,5=200\ N/mm^2$$

Permitted bond stress for concrete C12/15:

$$f_{b,zul}=f_{bk}/\gamma=2,25\ f_{ctk,0.05}/2,5=2,25+1,1/2,5$$
$$=0,99\ N/mm2$$

**2. Anchor forces**
IIn the following, the maximum horizontal force components $Z_S$, for which the diagonal tensile reinforcement is measured are calculated from the permissible diagonal tensile loads of the individual anchor sizes, assuming the greatest inclination (ß=45°):

$$Z_S = zul\ S * \sin 45°$$

The steel tensile forces amount:

| Anchor | zul S kN | $Z_S$ kN |
|---|---|---|
| Rd 12 | 5,0 | 3,5 |
| Rd 14 | 8,0 | 5,7 |
| Rd 16 | 12,0 | 8,5 |
| Rd 18 | 16,0 | 11,3 |
| Rd 20 | 20,0 | 14,1 |
| Rd 24 | 25,0 | 17,7 |
| Rd 30 | 40,0 | 28,3 |
| Rd 36 | 63,0 | 44,5 |
| Rd 42 | 80,0 | 56,6 |
| Rd 52 | 125,0 | 88,4 |

# Additional reinforcements for transverse and diagonal pull

**Static proof of the diagonal tensile reinforcement for BGW –waved end fixing insert**

**3. Proof of carrying capacity**
**Load capacity of steel section**

The carrying capacity of both legs of the reinforcement loop is:

$$zul\ Z_S = A_S * f_{s,zul}=2d_s^2*\pi*f_{s,zul} \quad \text{with } f_{s,zul}=200\ N/mm^2$$

I In the table, the load capacities of the selected reinforcement (diameter $d_S$ ) of the load are compared against and a degree of utilization $\eta$ is specified:

| anchor | $Z_s$ kn | $d_S$ mm | vorh As $cm^2$ | zul $Z_S$ kN | $\eta$ |
|---|---|---|---|---|---|
| Rd 12 | 3,5 | 6 | 0,57 | 11,3 | 31% |
| Rd 14 | 5,7 | 6 | 0,57 | 11,3 | 50% |
| Rd 16 | 8,5 | 8 | 1,01 | 20,1 | 42% |
| Rd 18 | 11,3 | 8 | 1,01 | 20,1 | 56% |
| Rd 20 | 14,1 | 8 | 1,01 | 20,1 | 70% |
| Rd 24 | 17,7 | 10 | 1,57 | 31,4 | 56% |
| Rd 30 | 28,3 | 12 | 2,26 | 45,2 | 63% |
| Rd 36 | 44,5 | 14 | 3,08 | 61,6 | 72% |
| Rd 42 | 56,6 | 16 | 4,02 | 80,4 | 70% |
| Rd 52 | 88,4 | 20 | 6,28 | 125,7 | 70% |

The selected reinforcement shall be anchored in the concrete for maximum load $Z_S$. The anchoring length $l_b$ begins at the end of the recess body.
The required anchoring length $l_b$ of the reinforcing leg is:

$$\text{erf } l_b = Z_S/(f_{b,zul} * 2 * d_S * \pi) \quad \text{with } f_{b,zul} = 0{,}99 \text{ N/mm}^2$$

| anchor | $Z_S$ kN | $d_S$ mm | erf $l_b$ mm |
|---|---|---|---|
| Rd 12 | 3,5 | 6 | 95 |
| Rd 14 | 5,7 | 6 | 152 |
| Rd 16 | 8,5 | 8 | 171 |
| Rd 18 | 11,3 | 8 | 227 |
| Rd 20 | 14,1 | 8 | 284 |
| Rd 24 | 17,7 | 10 | 284 |
| Rd 30 | 28,3 | 12 | 379 |
| Rd 36 | 44,5 | 14 | 512 |
| Rd 42 | 56,6 | 16 | 568 |
| Rd 52 | 88,4 | 20 | 710 |

# Additional reinforcements for transverse and diagonal pull

**Static proof of the diagonal tensile reinforcement for BGW –waved end fixing insert**

**4. Diagonal pull reinforcement**

The required total length l of the diagonal tensile reinforcement (unwinding) consists of the double anchoring length $l_b$ as well as the rod length to be guided around the double shaft anchor

$$l = 2\text{erf } l_b + \pi\, d_{br}$$

The leg length $l_s$ is as follows:

$$l_S = \text{erf } l_b + d_{br} / 2$$

The height H to the concrete upper edge at the end of the reinforcement loop is calculated as follows:

$$H = 10 + l_S * \sin 15° \text{ (mm)}$$

| anchor | $d_S$ mm | $d_{br}$ mm | l mm | $l_S$ mm | H mm |
|---|---|---|---|---|---|
| Rd 12 | 6 | 16,5 | 250 | 110 | 38 |
| Rd 14 | 6 | 20 | 370 | 170 | 54 |
| Rd 16 | 8 | 22 | 420 | 190 | 59 |
| Rd 18 | 8 | 25 | 540 | 240 | 72 |
| Rd 20 | 8 | 27,7 | 660 | 300 | 88 |
| Rd 24 | 10 | 31 | 670 | 300 | 88 |
| Rd 30 | 12 | 41 | 890 | 400 | 114 |
| Rd 36 | 14 | 48 | 1180 | 540 | 150 |
| Rd 42 | 16 | 54 | 1310 | 600 | 165 |
| Rd 52 | 20 | 70 | 1650 | 750 | 204 |

# *BGW*-Installation instruction for *BGW*-lifting socket and transport anchor



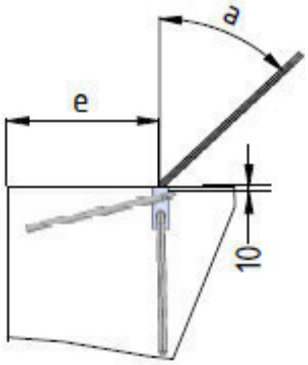


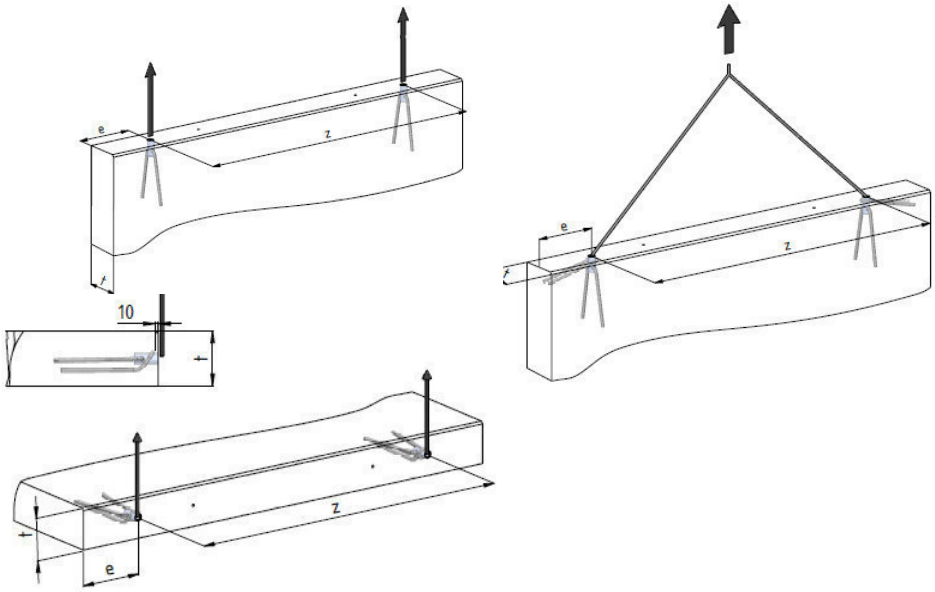


All facts concerning the load are valid only in connection with the reinforcement hangers of the table in the margin.)

| maximal load kg (1 kg = 10 N; 1000 kg = 1 t = 10 kN) | | | | | | | | | | | |
|---|---|---|---|---|---|---|---|---|---|---|---|
| 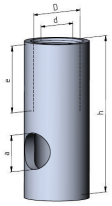 | | > 15 N/mm² concrete pressure strength | | | | > 25 N/mm² concrete pressure strength | | | | | |
| | | minimal ledge-thick-ness t/cm | minimal border distance e/cm | axial lift kg | diagonal lift with stirrup kg | minimal ledge thick-ness t/cm | minimal border distance e/cm | axial lift kg | diagonal lift until 45° with reinforcement kg | diagonal lift until 45° without reinforcement kg | Z |
| Rd 12 x 40 | 500 | 6 | 18 | 500 | 240 | 6 | 16 | 500 | 500 | 500 | 20 |
| Rd 14 x 48 | 800 | 6 | 22 | 800 | 260 | 6 | 18 | 800 | 600 | 700 | 22 |
| Rd 16 x 54 | 1200 | 8 | 25 | 1200 | 650 | 6,5 | 20 | 1200 | 650 | 1000 | 26 |
| Rd 18 x 65 | 1600 | 10 | 30 | 1600 | 800 | 7 | 20 | 1600 | 700 | 1200 | 30 |
| Rd 20 x 70 | 2000 | 10 | 30 | 2000 | 800 | 7 | 25 | 2000 | 800 | 1400 | 35 |
| Rd 24 x 80 | 2500 | 10 | 32 | 2500 | 800 | 8 | 30 | 2500 | 850 | 2000 | 44 |
| Rd 30 x 101 | 4000 | 14 | 35 | 4000 | 1800 | 10 | 35 | 4000 | 2100 | 4000 | 60 |
| Rd 36 x 125 | 6300 | 14 | 40 | 6300 | 2000 | 10 | 40 | 6300 | 3000 | 4200 | 65 |
| Rd 42 x 140 | 8000 | 16 | 50 | 8000 | 2800 | 12 | 50 | 8000 | 4600 | 7100 | 70 |
| Rd 52 x 170 | 12500 | 20 | 60 | 12500 | 3800 | 16 | 60 | 12500 | 6600 | 9000 | 80 |

# Reinforcement table for lifting sockets and transport anchors

| **d x h** | **maximum axial load** | **Measurements fort he reinfocement hangers out of stainless steel BSt 500 S** (1 kg = 10 N; 1000 kg = 1 t = 10 kN) | | |
|---|---|---|---|---|
| | | **k** | **G** | **B** |
| Rd 12 x 40 | 500 | 6 | 300 | 60 |
| Rd 14 x 48 | 800 | 8 | 300 | 70 |
| Rd 16 x 54 | 1200 | 10 | 350 | 70 |
| Rd 18 x 65 | 1600 | 10 | 350 | 70 |
| Rd 20 x 70 | 2000 | 12 | 400 | 80 |
| Rd 24 x 80 | 2500 | 14 | 450 | 100 |
| Rd 30 x 101 | 4000 | 16 | 600 | 130 |
| Rd 36 x 125 | 6300 | 20 | 600 | 150 |
| Rd 42 x 140 | 8000 | 25 | 650 | 200 |
| Rd 52 x 170 | 12500 | 25 | 900 | 300 |

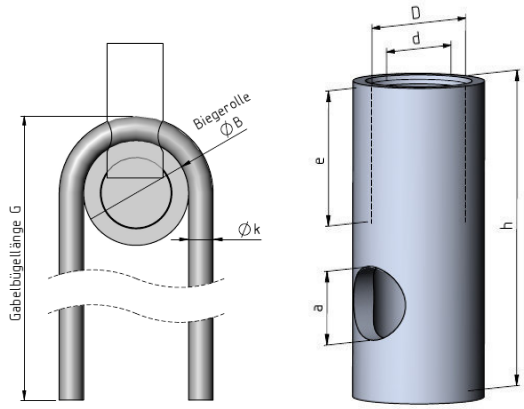


All facts are only valid in connection with the reinforcement hangers in the table.

# *BGW*-installation instruction for DWL, DWK

04/13(06/15)

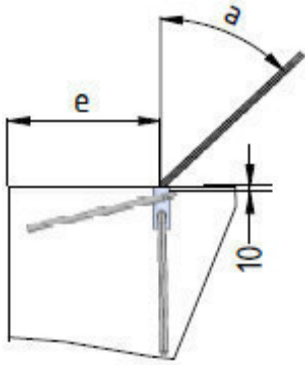


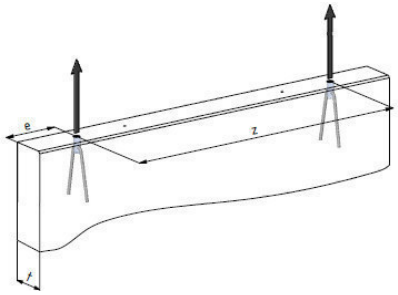


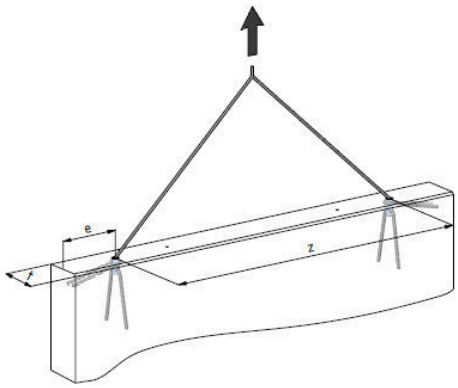


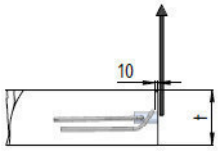


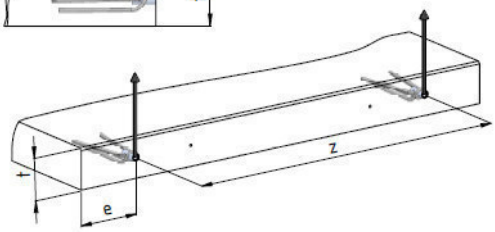


| maximal load in kg (1 kg = 10 N, 1000 kg = 1 t = 10 kN)<br>> 15 N/mm² concrete pressure strength | | | | | | | | |
|---|---|---|---|---|---|---|---|---|
| type<br>Rd | length<br>mm | form | Axial-/<br>diagonal lift<br>kg | diagonal lift<br>with stirrup<br>kg | Z<br>cm | minimal ledge<br>thickness<br>t/cm | minimal bor-<br>der distance<br>e/cm | comment |
| 12 | 108 | DWK | 500 / 250 | ---- | 30 | 6 | 16 | Special reinforce-<br>ment for cross- and<br>diagonal lift see table<br>at catalogue side<br>„BGW-installation<br>instruction for BGW-<br>anchor“<br>diagonal lift is:<br>0 – 45° |
| 14 | 130 | 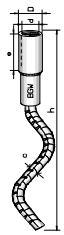 | 800 / 400 | ---- | 40 | 7 | 20 | |
| 16 | 167 | | 1200 / 600 | ---- | 40 | 8 | 30 | |
| 18 | 175 | | 1600 / 800 | ---- | 50 | 10 | 35 | |
| 20 | 187 | | 2000 / 1000 | ---- | 55 | 11 | 40 | |
| 24 | 240 | | 2500 / 1250 | ---- | 60 | 12 | 45 | |
| 30 | 300 | | 4000 / 2000 | ---- | 65 | 14 | 55 | |
| 36 | 360 | | 6300 / 3150 | ---- | 80 | 20 | 70 | |
| 42 | 450 | | 8000 / 4000 | ---- | 100 | 24 | 80 | |
| 12 | 137 | DWL | 500 / 500 | 250 | 30 | 6 | 16 | Special reinforce-<br>ment for cross- and<br>diagonal lift see table<br>at catalogue side<br>„BGW-installation<br>instruction for BGW-<br>anchor“<br>diagonal lift is:<br>0 – 45° |
| 14 | 170 | 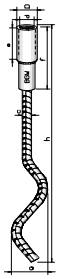 | 800 / 800 | 400 | 40 | 7 | 20 | |
| 16 | 216 | | 1200 / 1200 | 600 | 40 | 8 | 30 | |
| 18 | 235 | | 1600 / 1600 | 800 | 50 | 10 | 35 | |
| 20 | 257 | | 2000 / 2000 | 1000 | 55 | 11 | 40 | |
| 24 | 360 | | 2500 / 2500 | 1250 | 60 | 12 | 45 | |
| 30 | 450 | | 4000 / 4000 | 2000 | 65 | 14 | 55 | |
| 36 | 570 | | 6300 / 6300 | 3150 | 80 | 20 | 70 | |
| 42 | 620 | | 8000 / 8000 | 4000 | 100 | 24 | 80 | |
| 52 | 880 | | 12500 / 12500 | 6250 | 120 | 28 | 90 | |
| 48 | 1260 | | 22000 / 22000 | 11000 | 280 | 22 | 140 | |

# *BGW*-installation instruction for Fixing Inserts, Ripped Food Anchors and Screw Anchors

04/13(06/15)

Cross lift to plate level

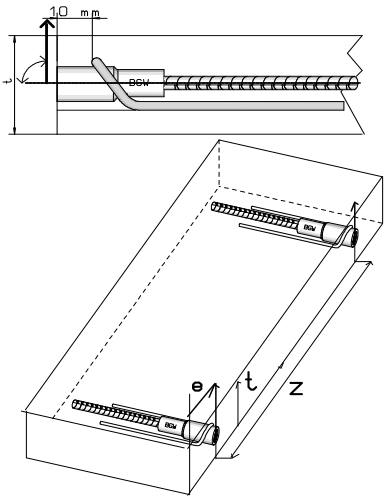


Diagonal lift in the plate level

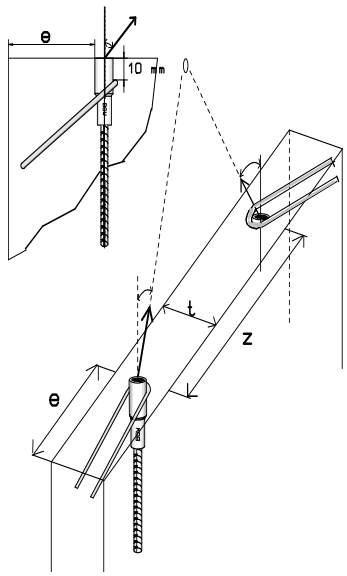


Axial lift in the plate level

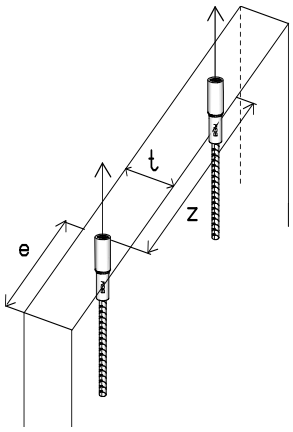


| maximal load in kg (1 kg = 10 N, 1000 kg = 1 t = 10 kN) > 15 N/mm² concrete pressure strength | | | | | | | | |
|---|---|---|---|---|---|---|---|---|
| **type Rd** | **length mm** | **form** | **Axial-/ diagonal lift kg** | **diagonal lift with stirrup kg** | **Z cm** | **minimal ledge thickness t/cm** | **minimal border distance e/cm** | **comment** |
| 12 | 100 | RFA | 500 | 250 | 30 | 6 | 15 | Special reinforcement for cross- and diagonal lift see table at catalogue side „BGW- installation instruction for BGW-anchor“ diagonal lift is: 0 – 45° |
| 12 | 174 | | 500 | 250 | | | | |
| 14 | 105 | | 800 | 400 | 40 | 6 | 20 | |
| 14 | 167 | | 800 | 400 | | | | |
| 16 | 130 | | 1200 | 600 | 40 | 8 | 20 | |
| 16 | 195 | | 1200 | 600 | | | | |
| 18 | 150 | | 1600 | 800 | 50 | 10 | 25 | |
| 18 | 275 | | 1600 | 800 | | | | |
| 20 | 190 | | 2000 | 1000 | 60 | 10 | 30 | |
| 20 | 300 | | 2000 | 1000 | | | | |
| 24 | 210 | | 2500 | 1250 | 60 | 12 | 30 | |
| 24 | 275 | | 2500 | 1250 | | | | |
| 30 | 390 | | 4000 | 2000 | 70 | 14 | 35 | |
| 30 | 510 | | 4000 | 2000 | | | | |
| 36 | 330 | | 6300 | 3150 | 80 | 20 | 40 | |
| 42 | 450 | | 8000 | 4000 | 100 | 24 | 50 | |
| 52 | 730 | | 12500 | 6250 | 120 | 27,5 | 60 | |
| 52 | 960 | | 12500 | 6250 | | | | |

| | | | | | | | | |
|---|---|---|---|---|---|---|---|---|
| 12 | 190 | **fixing insert.** | 500 | 250 | 30 | 6 | 16 | Special reinforcement for cross- and diagonal lift see table at catalogue side „BGW- installation instruction for BGW-anchor“ diagonal lift is: 0 – 45° |
| 14 | 230 | | 800 | 400 | 40 | 7 | 20 | |
| 16 | 250 | | 1200 | 600 | 40 | 8 | 30 | |
| 18 | 300 | | 1600 | 800 | 50 | 10 | 35 | |
| 20 | 350 | | 2000 | 1000 | 55 | 11 | 40 | |
| 24 | 400 | | 2500 | 1250 | 60 | 12 | 45 | |
| 30 | 500 | | 4000 | 2000 | 65 | 14 | 55 | |
| 36 | 650 | | 6300 | 3150 | 80 | 20 | 70 | |
| 42 | 800 | | 8000 | 4000 | 100 | 24 | 80 | |
| 52 | 900 | | 12500 | 6250 | 120 | 28 | 90 | |

**Screw anchor**

| | | | | | | | | |
|---|---|---|---|---|---|---|---|---|
| 12 | 70 | | 500 | 250 | 30 | 6 | 16 | Special reinforcement for cross- and diagonal lift see table at catalogue side „BGW- installation instruction for BGW-anchor“ diagonal lift is: 0 – 45° |
| 14 | 70 | | 800 | 400 | 40 | 7 | 20 | |
| 16 | 80 | | 1200 | 600 | 40 | 8 | 30 | |
| 18 | 100 | | 1600 | 800 | 50 | 10 | 35 | |
| 20 | 100 | | 2000 | 1000 | 55 | 11 | 40 | |
| 20 | 127 | | 2000 | 1000 | 55 | 11 | 40 | |
| 24 | 140 | | 2500 | 1250 | 60 | 12 | 45 | |
| 30 | 170 | | 4000 | 2000 | 65 | 14 | 55 | |

# Installation Instruction for BGW Flat Steel Anchor

06/06 (06/15)

BGW-Flat Steel Anchors are designed for lifting of precast concrete units of minimal height. The dimensions of the flat steel plate welded to the socket allow positioning the reinforcement bars directly on the flat steel. Thus a safe transmission of forces into the concrete via the reinforcement is guaranteed.

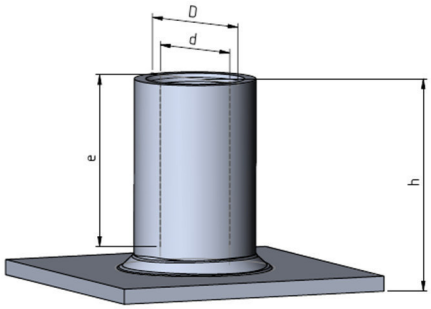


| art.-no. | load t | type d x h | flatsteel mm | e mm | D mm | pack.-unit Stück | weight ca. kg/100 piece |
|---|---|---|---|---|---|---|---|
| 0350 | 0,5 | Rd 12 x 30 | 35 x 35 x 3 | 22 | 16 | 100 | 4,0 |
| 0352 | 0,8 | Rd 14 x 33 | 35 x 35 x 3 | 25 | 18 | 100 | 6,0 |
| 0354 | 1,2 | Rd 16 x 35 | 35 x 35 x 3 | 27 | 21 | 100 | 9,0 |
| 0356 | 1,6 | Rd 18 x 44 | 60 x 60 x 5 | 34 | 25 | 50 | 18,5 |
| 0358 | 2,0 | Rd 20 x 47 | 60 x 60 x 5 | 35 | 27 | 50 | 24,5 |
| 0360 | 2,5 | Rd 24 x 54 | 60 x 60 x 5 | 43 | 32 | 50 | 33,0 |
| 0362 | 4,0 | Rd 30 x 72 | 130 x 130 x 8 | 56 | 38 | 25 | 67,0 |
| 0364 | 6,3 | Rd 36 x 80 | 130 x 130 x 8 | 69 | 48 | 10 | 107, |
| 0366 | 8,0 | Rd 42 x 98 | 130 x 130 x 8 | 80 | 54 | 10 | 147,0 |
| 0368 | 12,5 | Rd 52 x 120 | 130 x 130 x 8 | 97 | 70 | 10 | 254,0 |

(Note: 10 kN = 10 Kilonewton ≈ mass of 1ton or 1.000kg)
adm $F_Z$: admissible straight force
adm $F_Q$: admissible transversal shear force (see instructions overleaf)
MWL: Maximum working load

## 1. Reinforcement

BGW-Flat Steel Anchors are for use with concrete with a minimum compressive strength of 15 N/mm² at the time of the first lifting. It is necessary to install special reinforcement to transmit the forces, as well as a surface area reinforcement mesh. The surface reinforcement is shown in Table 1. Other forms of reinforcement, e.g. steel bars with corresponding cross sections can be used.

**Table 1 – Surface reinforcement (BSt 500M) mesh.**

| Size | Surface reinforcement | Size | Surface reinforcement |
|---|---|---|---|
| Rd12 | Q131 | Rd24 | Q188 |
| Rd14 | Q131 | Rd30 | Q221 |
| Rd16 | Q131 | Rd36 | Q221 |
| Rd18 | Q188 | Rd42 | Q513 |
| Rd20 | Q188 | Rd52 | Q513 |

The required special reinforcement and ist arrangement are shown in Table 2, Fig. 1 and Fig.2. The special reinforcement must be put over the flat steel and fixed there. Close contact is important. As from size Rd24 the installation should be in pairs, crossed.

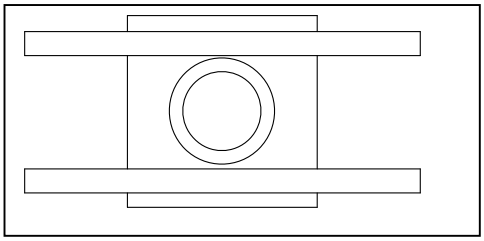

Fig. 1

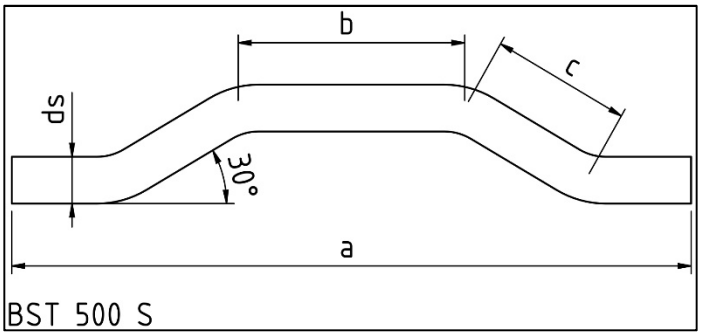


Fig. 2

**Table 2 – Special reinforcement for Flat Steel Anchors**

| Size | Max. Working load t | Adm. $F_z/F_Q$ kN | Number of Rebars (Fig. 2) | $d_s$ mm | a cm | b cm | c cm |
|---|---|---|---|---|---|---|---|
| Rd12 | 0,5 | 5 | 2 | 6 | 25 | 6 | 6 |
| Rd14 | 0,8 | 8 | 2 | 6 | 36 | 6 | 7 |
| Rd16 | 1,2 | 12 | 2 | 8 | 42 | 9 | 7 |
| Rd18 | 1,6 | 16 | 2 | 8 | 53 | 9 | 8 |
| Rd20 | 2,0 | 20 | 2 | 8 | 64 | 9 | 8 |
| Rd24 | 2,5 | 25 | 4 | 10 | 64 | 9 | 10 |
| Rd30 | 4,0 | 40 | 4 | 12 | 83 | 9 | 11 |
| Rd36 | 6,3 | 63 | 4 | 14 | 114 | 14 | 12 |
| Rd42 | 8,0 | 80 | 4 | 16 | 125 | 14 | 12 |
| Rd52 | 12,5 | 125 | 4 | 20 | 153 | 14 | 15 |

As from size Rd24 the installation should be in pairs, crossed – accoring to 8.

## 2. Edge distance, minimum distance, and minimum panel thickness

To guarantee the transmittance into the concrete certain distances between the individual anchors and from the edge must be observed. Also, the panel thickness must not fall short of a certain minimum size because of possible corrosion. The distances between the single anchors can be found in Table 3. See also Fig. 3!

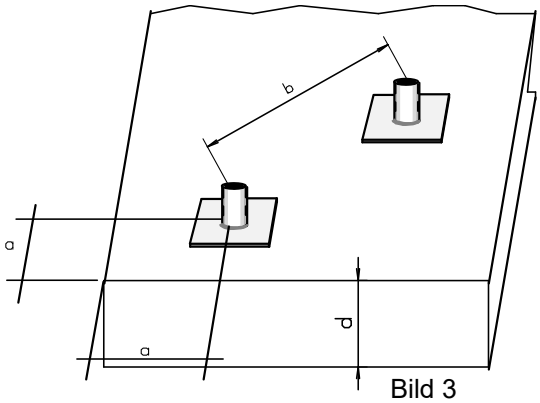


Bild 3

**Table 3 – Minimum dimensions**

| Size | adm $F_z/F_Q$ kN | Edge Distance a cm | Minimum Distance b cm | Minimum Panel Thickness d cm |
|---|---|---|---|---|
| Rd12 | 5 | 18 | 35 | 7 |
| Rd14 | 8 | 18 | 35 | 8 |
| Rd16 | 12 | 25 | 50 | 8,5 |
| Rd18 | 16 | 30 | 60 | 9,5 |
| Rd20 | 20 | 30 | 60 | 10 |
| Rd24 | 25 | 40 | 80 | 11,5 |
| Rd30 | 40 | 50 | 100 | 14 |
| Rd36 | 63 | 65 | 130 | 16 |
| Rd42 | 80 | 65 | 130 | 17,5 |
| Rd52 | 125 | 75 | 150 | 21,5 |

The minimum panel thickness was determined by taking the conditions of use as a basis, according to DN 0145 Table 10, line 1 and section 13.2. For other uses and environmetal conditions, the concrete cover c correspondin to section 13.2 of DIN 1045 must be increased so enlarging the panel thickness (Fig. 4).

When making a recessed installation with the BGW Recess Disc or the Magnetic Fixing HM4 the minimum panel thickness must be increased by the depth of the recess.

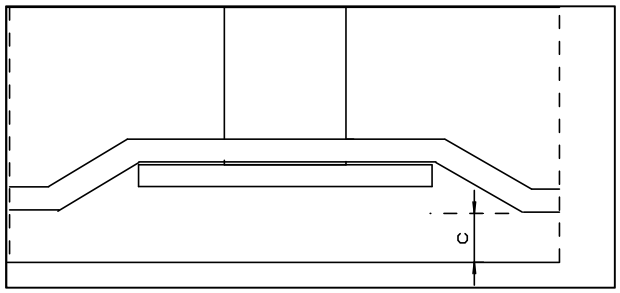


Bild 4

## 3. Parallel pull reinforcement

If Flat Steel Anchors are stressed through inclined forces – see Fig. 5 – the enxencuring horizontal force components must be taken by the concrete itself. Therefore as from a parallel shear pull angle b of more than 12,5°, a parallel shear pull reinforcement necessary, running at right angles to the Flat Steel Anchor, according to Table 4 (see Fig. 7). Close contact is important! The parallel shear pull reinforcement must be installs in the opposite direction to the horizontal force components.

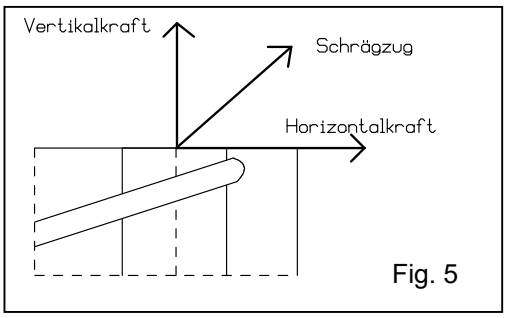

Fig. 5

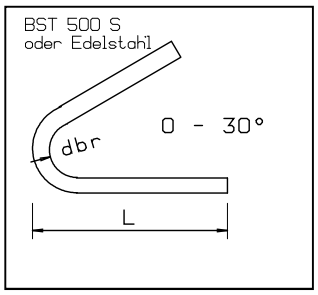

Fig. 7

**Table 4 – Parallel shear reinforcement with an angle of incliantion b > 12,5°**

| Size | adm. $F_Z$ kN | $d_s$ mm | L cm | $d_{br}$ mm |
|---|---|---|---|---|
| Rd12 | 5 | 6 | 16 | 24 |
| Rd14 | 8 | 6 | 25 | 24 |
| Rd16 | 12 | 8 | 28 | 32 |
| Rd18 | 16 | 8 | 34 | 32 |
| Rd20 | 20 | 8 | 41 | 32 |
| Rd24 | 25 | 10 | 46 | 40 |
| Rd30 | 40 | 12 | 55 | 48 |
| Rd36 | 63 | 14 | 70 | 56 |
| Rd42 | 80 | 16 | 80 | 64 |
| Rd52 | 125 | 20 | 100 | 140 |

Length (L) according to DIN 1045, section 18.5.2 for (C12/15), good bond condition (VB I).

## 4. Transversal Forece

When the Flat Steel Anchor is stressed by transversal pull, the ensuing forces must be transmitted into the panel with a suitable reinforcement.

This demands the positioning of the parallel shear reinforcement (Table 4) and the special reinforcement (Table 2) referred to Fig. 8 inserted cross wise is absolutely necessary to transmit the full load.

Other conditions are the same as when installing with straight pull

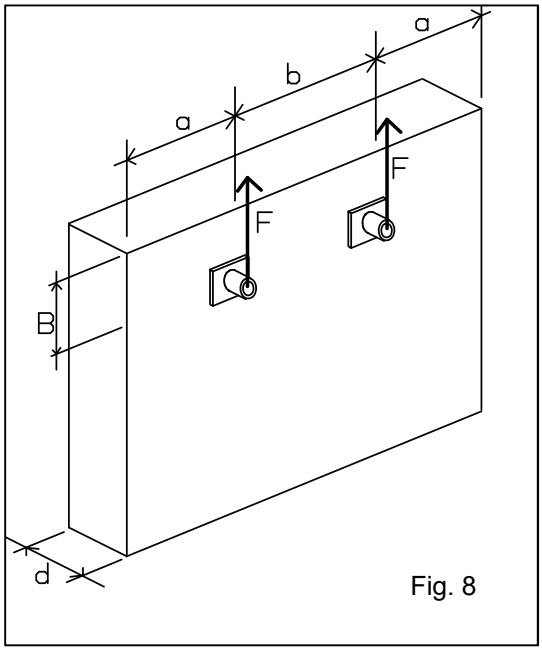

Fig. 8

# Installation and use instructions



## *BGW*-Lifting shackles for the capstan lifting system

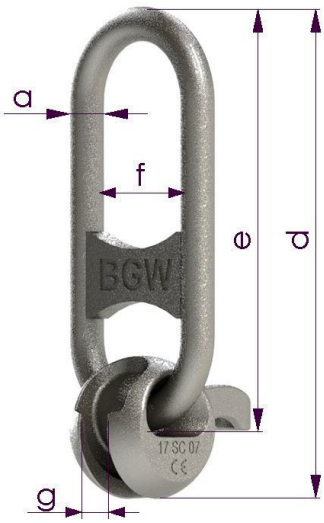


A manually operated coupling in different load stage versions, which correspond to those of the BGW-capstan lifter. The BGW-Lifting shackles for the capstan lifting system is coupled to a cast-in BGW-capstan lifter of the corresponding load stage. Even under load, any turning, tilting and pivoting movement is possible and harmless. This allows a safe and easy lifting of precast concrete parts of all kinds.

The BGW-Lifting shackles belongs to the BGW-capstan lifter system and complies with the safety regulations of the professional association "Safety rules for transport anchors and systems of precast concrete elements" (BGR 106).

When using the BGW-Lifting shackles, these installation and use instructions, the corresponding instructions for BGW transport anchors and the general installation and use instructions must be observed.

| Load t | art.-no. | weight kg | a mm | d mm | e mm | f mm | g mm |
|---|---|---|---|---|---|---|---|
| 1,0-1,3 | 1510 | 0,7 | 12 | 185 | 157 | 40 | 12 |
| 1,5-2,5 | 1512 | 1,2 | 14 | 198 | 165 | 50 | 16 |
| 3,0-5,0 | 1514 | 3,1 | 20 | 285 | 244 | 70 | 22 |
| 6,0-10,0 | 1516 | 5,9 | 25 | 358 | 309 | 100 | 30 |
| 12,0-20,0 | 1518 | 18,5 | 36 | 509 | 438 | 140 | 42 |
| 32,0 | 1522 | 39,0 | 45 | 629 | 528 | 160 | 54 |

### 1. Materials

The BGW-Lifting shackles for capstan lifter system is made of durable cast steel material. The claws incorporated therein serve to receive the anchor head. Due to the flexible design, the coupling element for hooks and shackles is suitable for all applications. The BGW-Lifting shackle is galvanized.

### 2. Usage

The BGW-Lifting shackles is used as a load handling device within the BGW-lifting anchor system. The coupling and uncoupling of the BGW-Lifting shackles can be carried out manually without any problems after manual unloading. The application is possible for the load cases axial, oblique and transverse. The installation of products from the BGW-capstan lifter anchor system requires the use of BGW-capstan lifter pocket former, which ensures the correct position of the armature as well as easy and safe coupling of the BGW-Lifting shackles.

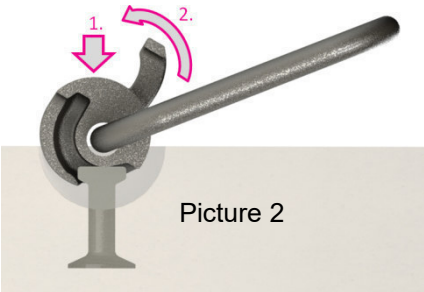


Picture 2

### 2.1 Coupling

The BGW-Lifting shackles is placed with the opening facing downwards on the lifting anchor (1.) and coupled by turning the lifting head (2.) (see picture 2). However, the permissible load of the armature must be observed.

### 2.2 Lift and turn

The BGW-Lifting shackles is designed in such a way that unintentional uncoupling (even without loading by lifting tackle) is not possible. The oval link as a crossbar functions as a stop and stops uncontrolled uncoupling (see picture 3).

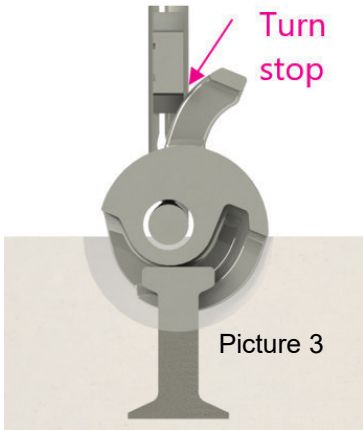


Picture 3

With the BGW-Lifting shackles, precast concrete parts can be lifted in all directions (axial, oblique, and transverse). When lifting and rotating components, special attention must be paid to the position of the insertion beak (operating lever). This must be horizontal and rest on the concrete (see picture 4). In the case of an axial pull with two siphons, it must be ensured that the component must hang smoothly, it must not oscillate in the insertion opening of the lifters. In addition, make sure that the lifters do not open. Pulling to the side of the insertion opening is not permitted (see picture 5).

If the anchor is in a horizontal position when lifting, note the following:
The insertion beak (operating lever) points either in the pulling direction (see picture 6) or 180 degrees opposite to the pulling direction (see picture 7). The permissible load of the armature must not exceed 50% of the maximum value.

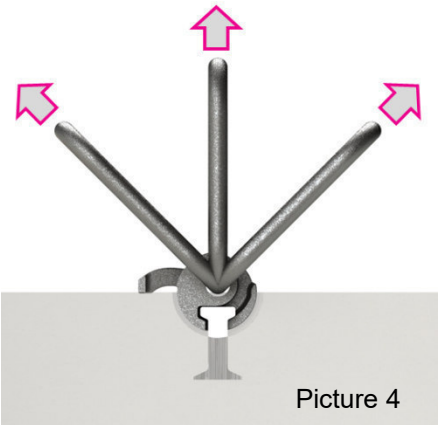

Picture 4

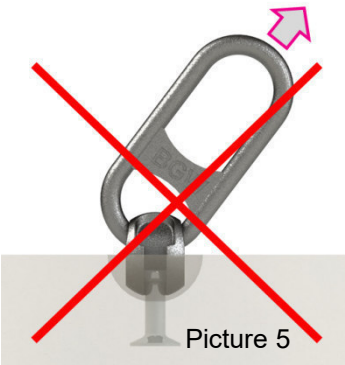

Picture 5

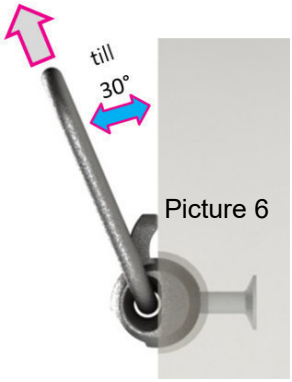


Picture 6

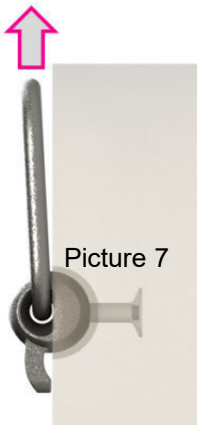

Picture 7

### 2.3 Uncouple

To uncouple the BGW-Lifting shackles, it must be relieved (1.), then by turning back the lifter head (2.) the uncoupling (3.) of the BGW-Lifting shackles (see picture 8).

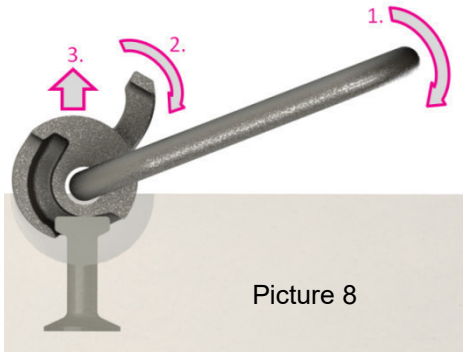

Picture 8

### 3. Corrosion protection

The corrosion protection of the BGW-capstan lifter system can be increased by recessed installation. The additional pocket former must be fully functional.
Guarantee use in accordance with this use, instructions and at least correspond to the dimensions of the table 2.

**Table 2: Dimensions Recessed installation**

| load t | radius k mm |
|---|---|
| 1,3 | 52,0 |
| 1,5-2,5 | 60,0 |
| 3,0-5,0 | 83,0 |
| 6,0-10,0 | 113,0 |
| 15,0-20,0 | 151,0 |
| 21,0-32,0 | 180,0 |

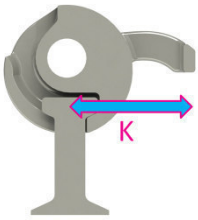


### 4. Security note / Maintenance

If there is virtually no wear and tear under normal conditions, the BGW-Lifting shackles should be checked by a qualified person at least once a year in accordance with the BGR 500 chapter 2.8, as these are considered to be load handling devices. This test must be carried out by a qualified person and is the responsibility of the company. In addition to damage of any kind, especially the degree of wear is noted.

In principle, the current accident prevention regulations must be observed. The correct hook size and shape must be observed, as this can extend the service life.

Modifications and repairs, in particular welds on the BGW-Lifting shackles are not permitted! In the case of a version with rope, this must be replaced as soon as a wire of a strand is broken, in case of bruising, corrosion scars or kinks. The use of the BGW-Lifting shackles with rope is permitted only with an original BGW rope.

If the BGW-Lifting shackles is subjected to extraordinary loads (eg damage event), it must be subjected to an extraordinary inspection by an expert (BGR 500 chapter 2.8 section 3.15.3). The test follows the criteria listed below. The discard condition of BGW-Lifting shackles is in accordance with the provisions of BGR 500 Chapter 2.8 Section 3.15.4.

### 5. Replacement criteria and inspection

Before checking, the BGW-Lifting shackles must be cleaned, and to observe the following:

- Cracks in ball and coupling link
- On plastic deformation replacement criteria of the BGW-Lifting shackles is reached. Deformations such as bent chain link, pressure points by slings, etc.
- if the permissible wear dimensions are exceeded or not reached, the replacement criteria is also reached (see Table 3 and picture)

**The continued use of damaged lifting devices or equipment already met the replacement criteria is not permitted!**

**Table 3: Limit for wear**

If the limit values specified in the table are exceeded, the relevant spherical head lifter must not be used anymore, as well as notches on the steel frame.

## Limits of sizes for wear for *BGW*-Lifting shackles

| load | maximum „h“ |
|---|---|
| 1,0 – 1,3 t | 12 mm |
| 1,5 – 2,5 t | 16 mm |
| 3,0 – 5,0 t | 22 mm |
| 6,0 – 10,0 t | 30 mm |
| 12,0 – 20,0 t | 42 mm |
| 32,0 t | 54 mm |

**BGW-Lifting shakles with rope made of steel:**
The following defects must be investigated:

- bents and kinks (Klanken)
- broken strand
- Bruises in free length
- corrosion pits
- Damage or heavy wear of the rope or rope end connection

### 6. Marking

BGW ball end lifters are marked with the following information: BGW marking, load rating, CE marking.

Acids, bases and other aggressive agents that can cause corrosion are to be kept away from BGW-Lifting shackles. Modifications and repairs, in particular welds on the BGW-Lifting shackles are not permitted!
BGW-Lifting shackles with visible deformation of the chain link should be removed - with rope: use only in perfect condition. It is important to pay particular attention to bends and notches. Observe limit dimensions!

# *BGW*-Installation Instruction for Capstan Lifter

08/13(01/13)

Table 1 of maximum anchor loads when installing the BGW-Capstan Lifter according to sketch 1.

| load | length | maximum anchor load at a concrete strength KN | | | |
|---|---|---|---|---|---|
| t | mm | 15 N/mm2 | 25 N/mm2 | 35 N/mm2 | 45 N/mm2 |
| 1,3 | 65 | 12,0 | 13,0 | 13,0 | 13,0 |
| 1,3 | 85 | 12,5 | 13,0 | 13,0 | 13,0 |
| 1,3 | 120 | 13,0 | 13,0 | 13,0 | 13,0 |
| 1,3 | 240 | 13,0 | 13,0 | 13,0 | 13,0 |
| 2,5 | 75 | 17,0 | 23,0 | 25,0 | 25,0 |
| 2,5 | 85 | 18,0 | 23,5 | 25,0 | 25,0 |
| 2,5 | 120 | 25,0 | 25,0 | 25,0 | 25,0 |
| 2,5 | 140 | 25,0 | 25,0 | 25,0 | 25,0 |
| 2,5 | 170 | 25,0 | 25,0 | 25,0 | 25,0 |
| 2,5 | 280 | 25,0 | 25,0 | 25,0 | 25,0 |
| 4,0 | 75 | 18,0 | 23,9 | 27,0 | 31,0 |
| 4,0 | 100 | 30,0 | 38,0 | 40,0 | 40,0 |
| 4,0 | 120 | 40,0 | 40,0 | 40,0 | 40,0 |
| 4,0 | 170 | 40,0 | 40,0 | 40,0 | 40,0 |
| 4,0 | 240 | 40,0 | 40,0 | 40,0 | 40,0 |
| 4,0 | 340 | 40,0 | 40,0 | 40,0 | 40,0 |
| 5,0 | 75 | 18,0 | 23,9 | 27,0 | 31,0 |
| 5,0 | 100 | 30,0 | 38,0 | 40,0 | 45,0 |
| 5,0 | 120 | 42,0 | 50,0 | 50,0 | 50,0 |
| 5,0 | 180 | 50,0 | 50,0 | 50,0 | 50,0 |
| 5,0 | 240 | 50,0 | 50,0 | 50,0 | 50,0 |
| 5,0 | 340 | 50,0 | 50,0 | 50,0 | 50,0 |
| 5,0 | 480 | 50,0 | 50,0 | 50,0 | 50,0 |
| 7,5 | 120 | 42,0 | 53,0 | 58,0 | 65,0 |
| 7,5 | 165 | 75,0 | 75,0 | 75,0 | 75,0 |
| 7,5 | 200 | 75,0 | 75,0 | 75,0 | 75,0 |
| 7,5 | 300 | 75,0 | 75,0 | 75,0 | 75,0 |
| 10 | 115 | 35,0 | 45,0 | 58,0 | 65,0 |
| 10 | 150 | 59,0 | 79,0 | 82,0 | 90,0 |
| 10 | 170 | 78,0 | 80,0 | 90,0 | 95,0 |
| 10 | 200 | 100,0 | 100,0 | 100,0 | 100,0 |
| 10 | 340 | 100,0 | 100,0 | 100,0 | 100,0 |
| 15 | 165 | 72,0 | 94,0 | 150,0 | 150,0 |
| 15 | 300 | 150,0 | 150,0 | 150,0 | 150,0 |
| 15 | 400 | 150,0 | 150,0 | 150,0 | 150,0 |
| 20 | 180 | 85,0 | 109,0 | 130,0 | 160,0 |
| 20 | 200 | 85,0 | 109,0 | 130,0 | 160,0 |
| 20 | 240 | 113,0 | 146,0 | 173,0 | 190,0 |
| 20 | 340 | 200,0 | 200,0 | 200,0 | 200,0 |
| 20 | 500 | 200,0 | 200,0 | 200,0 | 200,0 |
| 32 | 700 | 282,8 | 320,0 | 320,0 | 320,0 |
| 32 | 1200 | 320,0 | 320,0 | 320,0 | 320,0 |

Skizze 1

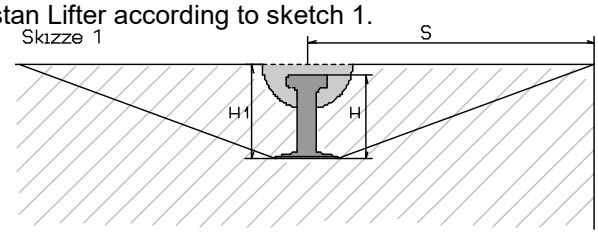


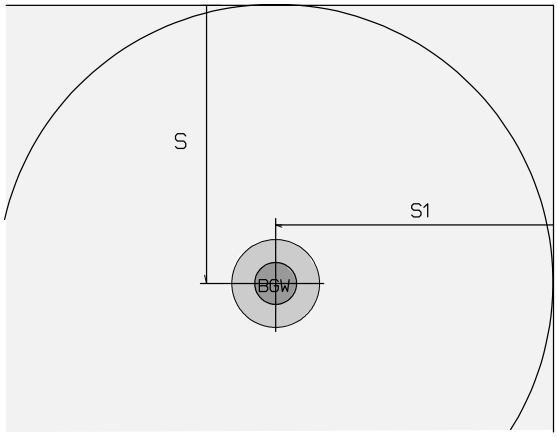


Skizze 2

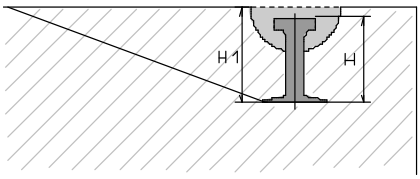


Table 2 anchor loads of Capstan Lifters with small distance to a precast edge (see sketch 2).
The specified minimum distance “S1” should not fall below.

| load | length H | maximal anchor load at a concrete strength KN | | minimum distance S1 to end of component | H1 mm | edge distance S (=H1 x 3) mm |
|---|---|---|---|---|---|---|
| t | mm | 15 N/mm2 | 20 N/mm2 | mm | | |
| 1,3 | 120 | 12,4 | 13,0 | 45 | 130 | 390 |
| 1,3 | 240 | 13,0 | 13,0 | 45 | 250 | |
| 2,5 | 170 | 25,0 | 25,0 | 55 | 181 | 543 |
| 2,5 | 280 | 25,0 | 25,0 | 55 | 291 | |
| 4,0 | 210 | 37,4 | 40,0 | 70 | 225 | 675 |
| 4,0 | 340 | 39,5 | 40,0 | 70 | 355 | |
| 5,0 | 240 | 49,5 | 50,0 | 80 | 255 | 765 |
| 5,0 | 280 | 50,0 | 50,0 | 80 | 295 | |
| 7,5 | 300 | 67,0 | 75,0 | 90 | 315 | 945 |
| 7,5 | 540 | 72,0 | 75,0 | 90 | 555 | |
| 10,0 | 340 | 100,0 | 100,0 | 110 | 355 | 1065 |
| 10,0 | 680 | 100,0 | 100,0 | 110 | 695 | |
| 15,0 | 400 | 145,3 | 150,0 | 150 | 415 | 1245 |
| 20,0 | 500 | 197,9 | 200,0 | 150 | 515 | 1545 |
| 20,0 | 1000 | 200,0 | 200,0 | 150 | 1015 | |
| 32,0 | 1200 | 320,0 | 320,0 | 200 | 1227 | 2150 |

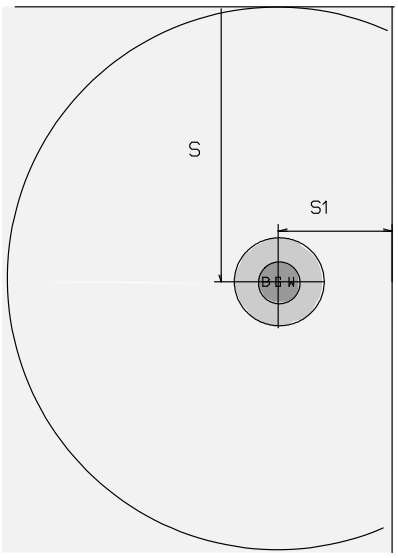

## Rated guidelines for BGW-Capstan Lifter

According to the following formula, the tensile force "F" acting on the lifting anchor can be determined in almost all cases of installation:

$$F = \frac{M * ß * \varepsilon * \Phi}{n}$$

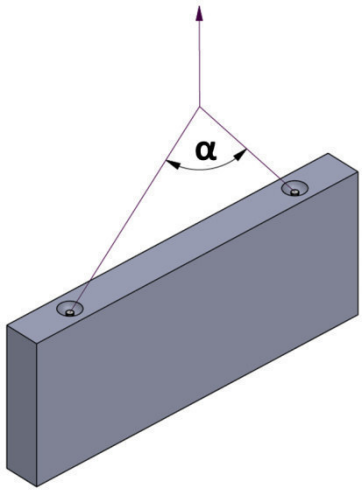


F = lifting power, according to the formula

M = mass of the precast concrete unit plus steel reinforcement

ß = spread angle factor

| Angle $\alpha$ | 0° | 30° | 60° | 90° | 120° |
|---|---|---|---|---|---|
| Spread angle factor ß | 1 | 1,04 | 1,16 | 1,41 | 2,00 |

$\varepsilon$ = coefficient of impact during transport and installation

| Transportgadget | crane with $\nu \leq 90$ m/min | crane with $\nu \geq 90$ m/min | transportation with an excavator |
|---|---|---|---|
| coefficient of impact $\varepsilon$ | 1,0 | $\geq$ 1,3 | $\geq$ 2,0 |

$\Phi$ = shuttering adhesion factor

Following additional factors have to be calculated:

- at flat, non- lubricated shuttering 2 kN/m2
- at rough shuttering 3 kN/m2

adhesion factor at:

| | Liability factor $\Phi$ |
|---|---|
| $\pi$ - ceilings | $\geq$ 2 |
| Rip-ceilings | $\geq$ 3 |
| „Kassetten“ ceilings | $\geq$ 5 |

n = number of the carrying anchors

For axial pull with two lifters:
Ensure that the component has to hang smoothly, it must not oscillate into the slot opening of the lifter.
It is also important to ensure that the lifters do not open.

# *BGW*-Ring coupling

10/07(10/07)

A manually operated clutch in different load stage versions, which correspond to those of the BGW-Spread anchor.

The BGW-Ring coupling consists of a stop bracket and a coupling head. The bracket is movable in any direction.
The BGW-Ring coupling is coupled to the recess of the corresponding load stage in the concrete.
It can be manually released after relieving the bolt by pushing back the bolt.

Lying prefabricated parts can be easily aligned from the horizontal to the vertical position - in accordance with the relevant installation instructions of the BGW-lifting anchor.
Even under load, any turning, tilting and pivoting movement is possible and harmless. However, the permissible load of the anchors must be observed.

The BGW ring coupling enables a safe and easy lifting of precast concrete parts of all kinds.

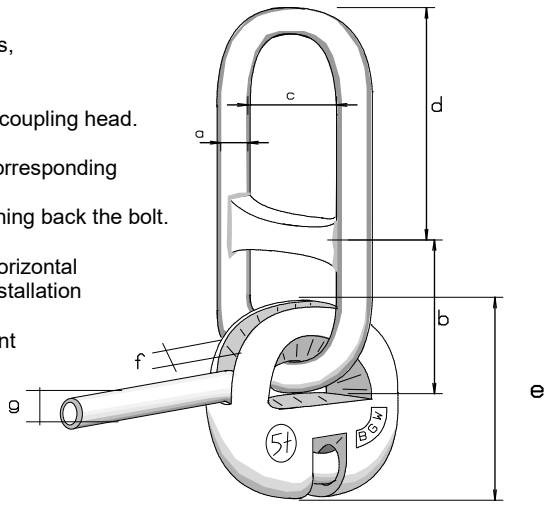


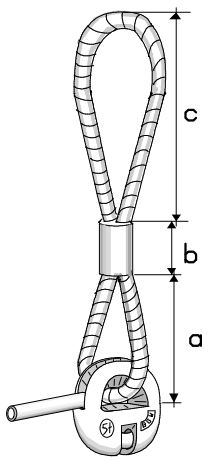


**Ring coupling with rope**

**table 1:**

| load t | art.-no. | weight kg | a mm | b mm | c mm | d mm | e mm | f mm |
|---|---|---|---|---|---|---|---|---|
| 2,5 | TPA-R1-2,50 | 1,20 | 14,0 | 49 | 50 | 90 | 79 | 27 |
| 5,0 | TPA-R1-5,00 | 2,88 | 18,0 | 69 | 70 | 124 | 98 | 36 |
| 10,0 | TPA-R1-10,0 | 10,67 | 25,0 | 115 | 90 | 171,7 | 137 | 50 |
| 26,0 | TPA-R1-26,0 | 20,86 | 36,0 | 100 | 90 | 200 | 210 | 72 |

## 1. Identification

The BGW ring couplings are marked with the following information: BGW marking, load level, CE marking. In addition, the position of the bolt "Auf - Zu" (open – close) is marked on the opposite side.
The ring couplings are safely assigned to the anchors both by the structural design and by the identification of the anchor types and load groups without the risk of confusion.

## 2. Application

### 2.1 Engage

Insert the BGW ring coupling into the recess in the concrete and close the bolt or slider by manual operation until it stops. It must be ensured that the respective permissible load level of the armature is not exceeded.
The precast concrete element can now be raised.

### 2.2 Manipulate

The BGW ring coupling can be stressed in all directions (axial, transverse tension is possible - however, observe the permissible load level of the armature!).
Stretching caused by skew is allowed up to 60 °.

### 2.3 Declutch

Manually push back and release the bolt of the BGW ring coupling by hand.

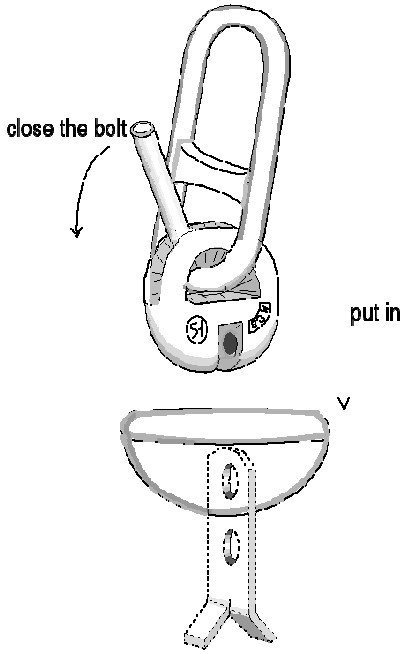


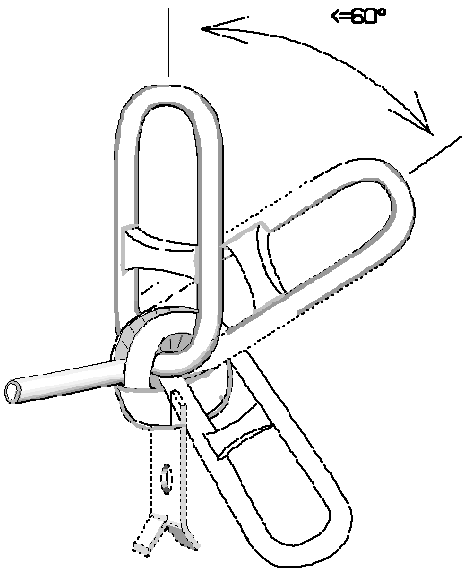


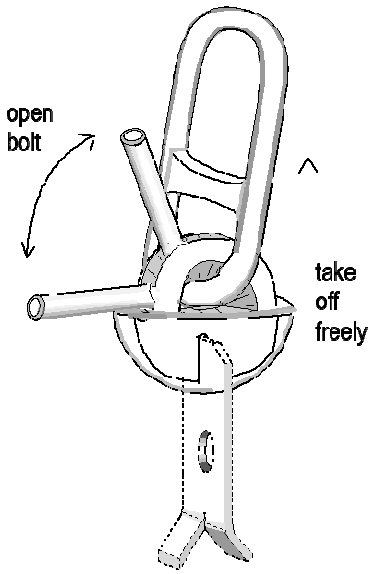

If the bracket is under the coupling head under loading, it can lock in the position shown. When lifting the round bar is then bent.

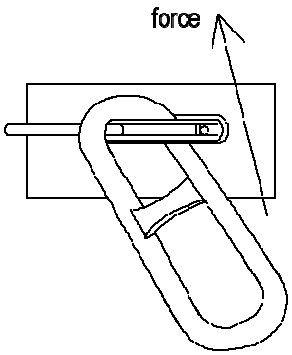


If the strap is pulled in the direction of the plate surface during loading, it may bend at the plate edge.

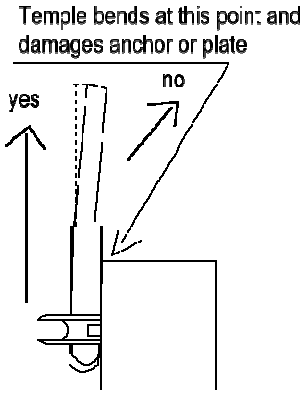


In the upper position of the bracket can block in the clutch housing. A shallow angle of the sling rope leads to deformation of the bracket. By turning the bracket by about 45 °, the problem can be solved (bottom picture).

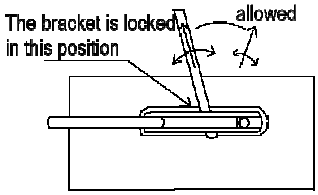


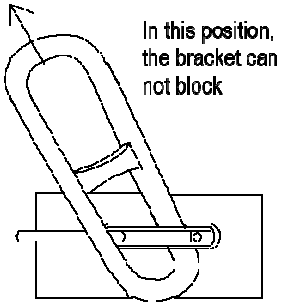


**3. Maintenance / Safety**
The combination of our products with parts from other manufacturers is expressly warned. Function and safety of the ring coupling can only be guaranteed when using the original ring couplings.

Although there is virtually no wear under normal conditions, the ring couplings should be checked by a qualified person at least once a year. In addition to damage of any kind, especially the degree of wear is noted. The use of rope (eg ring coupling 1.25 to) is only permitted with original BGW rope.

If the limit values specified in the table are exceeded, the relevant ring coupling may no longer be used, as well as notches on the steel bracket / rope and on the bolt.

**table 2: Limits of sizes for BGW-Ring couplings bolt**

| load | nominal measure D mm | minimum D mm |
|---|---|---|
| 1,2 t | 8 +0,4/-06 | 7 |
| 2,5 t | 13 +0,7/-04 | 12 |
| 5,0 t | 16,5 –0,7/-0,4 | 15,5 |
| 10,0 t | 23,5 –0,8/-0,4 | 22,5 |
| 26,0 t | 32 +0,9/-0,5 | 31 |

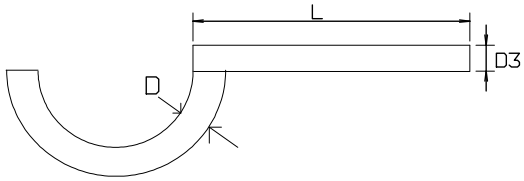


**The following criteria must be observed when checking the BGW-Ring couplings:**
**bolts:**
Deformed and worn bolts should always be replaced. Limit dimensions must be observed according to table 2.
**coupling head:**
If the coupling head is deformed, the coupling must be removed and can not be repaired. If the mouth opening is enlarged, the couplings must be removed immediately. Limit values in table 3 are to be observed.

**table 3: Coupling head**

| load t | nominal measure e1/mm | maximum e1/mm |
|---|---|---|
| 1,25 | 7 +/- 0,12 | 8 |
| 2,5 | 15 – 17,5 | 17,5 |
| 5,0 | 18 + 0,5/-1,0 | 19,5 |
| 10,0 | 22 +/- 0,5 | 23,5 |
| 26,0 | 34 + 2,0/-1,0 | 37 |

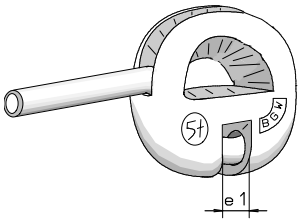


**Ring coupling with rope - model 26 t**

| load/ t | art-no. Ring coupling with rope | Ø rope/ mm | a/mm | b/mm | c/mm | weight/kg Ring coupling with rope |
|---|---|---|---|---|---|---|
| 1,25 | TPA-R1-1,25-S | 8 | 60 | 50 | 210 | 0,250 |
| 2,5 | TPA-R1-2,50-S | 14 | 120 | 90 | 195 | 1,16 |
| 5,0 | TPA-R1-5,00-S | 18 | 200 | 100 | 295 | 3,10 |
| 10,0 | TPA-R1-10,0-S | 22 | 240 | 140 | 325 | 7,30 |
| 26,0 | TPA-R1-26,0-SO | 34 | 1570 | 160 | 480 | 10,10 |

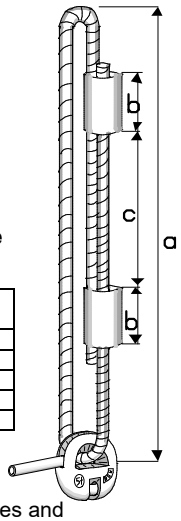


**BGW-Ring coupling with steel rope:**
The following defects must be investigate
- kinks
- broken strand
- bruises in free length
- corrosion scars
- Damage or heavy wear of the rope or rope end connection

Acids, alkalis and other aggressive agents that can cause corrosion are to be kept away from BGW-Ring couplings. Changes and repairs, in particular welds on the BGW-Ring couplings are not permitted!
BGW-Ring couplings with visible deformations of the chain link are to be removed. It is important to pay particular attention to bending and notching. Observe limit values table 1!

# Verkaufs- und Lieferbedingungen

## 1. Allgemeines

1.1 Unsere Verkaufs- und Lieferbedingungen gelten ausschließlich; entgegenstehende oder von unseren Verkaufs- und Lieferbedingungen abweichende Bedingungen des Bestellers erkennen wir nur an, wenn wir deren Geltung schriftlich zugestimmt haben. Unsere Verkaufs- und Lieferbedingungen haben auch Gültigkeit, wenn wir in Kenntnis entgegenstehender und abweichender Bedingungen des Bestellers die Lieferung vorbehaltlos ausführen.

1.2 Mündliche Nebenabreden sind nur wirksam, wenn sie von uns schriftlich bestätigt wurden.

1.3 Unsere Verkaufs- und Lieferbedingungen gelten nur gegenüber Kaufleuten im Sinne des 24 AGBG.

1.4 Unsere Verkaufs- und Lieferbedingungen gelten auch für alle nachfolgenden Aufträge mit dem Besteller, selbst wenn darüber nicht nochmals eine ausdrückliche Vereinbarung getroffen wird.

## 2. Abschluss und Inhalt des Kaufvertrages

2.1 Unsere Angebote sind stets freibleibend. Aufträge des Bestellers gelten erst dann als angenommen, wenn sie von uns schriftlich bestätigt wurden.

2.2 Maß- und Konstruktionsänderungen unserer Produkte behalten wir uns nach Vertragsabschluss ausdrücklich vor, solange hierdurch die Verwendbarkeit des Produkts nach dem Verwendungszweck – insbesondere die Nebentraglast – nicht beeinträchtigt wird. Bewirkt die Maß- und Konstruktionsänderung keine Beeinträchtigung des Verwendungszwecks, ist der Besteller zur Abnahme der geänderten Produkte verpflichtet.

## 3. Preise und Zahlungsbedingungen

3.1 Ergibt sich aus der Auftragsbestätigung nichts anderes, ist die gesetzliche Mehrwertsteuer in unseren Preisen nicht eingeschlossen. Die Preise gelten „ab Werk".

3.2 Der Abzug von Skonto bedarf einer besonderen schriftlichen Vereinbarung.

3.3 Sofern sich aus der Auftragsbestätigung nichts anderes ergibt, sind Zahlungen innerhalb von 30 Tagen ab Rechnungsdatum netto zu leisten. Bei Überschreitung der Zahlungsfrist sind wir berechtigt, Verzugszinsen in Höhe von 8 % über dem Basiszinssatz zu fordern. Die Geltendmachung eines höheren Verzugsschadens bleibt hiervon unberührt.

3.4 Die Aufrechnung mit Gegenansprüchen des Bestellers ist nur zulässig, wenn diese unbestritten oder rechtskräftig festgestellt sind. Der Besteller ist zur Ausübung eines Zurückhaltungsrechts nur insoweit befugt, als der Gegenanspruch aus dem gleichen Vertragsverhältnis hervorgeht.

## 4. Liefertermine – Lieferfristen

4.1 Fristen und Termine von Lieferungen sind nur verbindlich, wenn sie vom Lieferer ausdrücklich schriftlich bestätigt wurden.

4.2 Setzt der Besteller dem Lieferer, nachdem dieser in Lieferverzug geraten ist, eine angemessene Nachfrist mit Ablehnungsdrohung und ist diese fristlos verstrichen, so ist der Besteller berechtigt, vom Vertrag insoweit zurückzutreten, als Lieferung noch nicht erfolgt ist.

4.3 Schadensersatzansprüche wegen Nichterfüllung stehen dem Besteller nur zu, wenn der Verzug auf Vorsatz oder grobe Fahrlässigkeit zurückzuführen ist. Ersatzfähig sind nur Schäden, deren möglicher Eintritt für den Lieferanten bei Vertragsabschluss anhand der vom Besteller ausdrücklich mitgeteilten Umständen erkennbar war; im übrigen ist die Schadensersatzhaftung auf 50% des eingetretenen Schadens begrenzt.

4.4 Die vorstehende Haftungsgrenze gilt nicht, wenn ein kaufmännisches Fixgeschäft vereinbart wurde oder der Besteller geltend machen kann, dass sein Interesse an der Vertragserfüllung wegen des von uns vertretenden Verzuges weggefallen ist.

## 5. Gefahrenübergang

5.1 Mangels anderer Angaben in der Auftragsbestätigung ist Lieferung „ab Werk" vereinbart.

5.2 Nur auf ausdrücklichen Wunsch des Bestellers wird die Ware auf dessen Kosten gegen Transportschäden und sonstige Risiken versichert.

## 6. Gewährleistung

6.1 Gewährleistungsansprüche des Bestellers setzen voraus, daß dieser seinen Untersuchungs- und Rügepflichten nach 377, 378 HGB ordnungsgemäß nachgekommen ist.

6.2 Ist der Gewährleistungsfall gegeben, so sind wir nach unserer Wahl zur Ersatzlieferung oder Nachbesserung berechtigt.

6.3 Lässt der Lieferer eine ihm vom Besteller zu setzende, angemessene Nachfrist aus zu vertretenden Gründen verstreichen, ohne den Mangel zu beseitigen, oder Ersatz zu liefern, oder schlägt die Mangelbeseitigung/Ersatzlieferung in sonstiger Weise fehl, so kann der Besteller nach seiner Wahl vom Vertrag zurücktreten oder eine entsprechende Minderung des Kaufpreises verlangen.

6.4 Soweit sich nachstehend nichts anderes ergibt, sind weitergehende Ansprüche des Bestellers – gleich aus welchen Rechtsgründen – ausgeschlossen. Der Lieferer haftet daher nicht für Schäden, die nicht im Liefergegenstand selbst entstanden sind; insbesondere haften wir nicht für einen entgangenen Schaden oder sonstige Vermögensschäden des Bestellers.

6.5 Die vorstehende Haftungsfreizeichnung gilt nicht, soweit die Schadensursache auf Vorsatz oder grober Fahrlässigkeit beruht. Sie gilt auch dann nicht, wenn der Besteller Schadensersatzansprüche wegen Nichterfüllung aufgrund des Fehlens einer zugesicherten Eigenschaft gem. 463,480 Abs. 2 BGB geltend macht.

6.6 Bei fahrlässiger Verletzung einer vertragswesentlichen Pflicht ist unsere Ersatzpflicht – Versicherung beschränkt. Auf Verlangen des Bestellers ist der Lieferer bereit, Einsicht in die Versicherungspolice zu gewähren.

6.7 Die Verjährungsfrist für Gewährleistungsansprüche beträgt 6 Monate, gerechnet ab Gefahrenübergang, und gilt auch für Ansprüche auf Ersatz von Mangelfolgeschäden, soweit keine Ansprüche aus unerlaubter Handlung geltend gemacht werden.

## 7. Schadensersatzansprüche

7.1 Ohne Rücksicht auf den Rechtsgrund sind Schadensersatzansprüche des Bestellers gegen den Lieferer über den in 6.4 bis 6.6 hinausgehenden Haftungsumfang ausgeschlossen. Ein Haftungsausschluss oder eine Haftungsabgrenzung für den Lieferer gilt auch stets für dessen Erfüllungsgehilfen.

7.2 Weitergehende Ansprüche nach dem Produktionsgesetz werden durch die vorstehende Bestimmung nicht ausgeschlossen. Dies gilt auch für Ansprüche aus zu vertretender Unmöglichkeit oder aus anfänglichem Unvermögen.

## 8. Eigentumsvorbehalt

8.1 Von uns gelieferte Ware bleibt unser Eigentum, bis alle Verbindlichkeiten des Bestellers aus der Geschäftsverbindung mit uns vollständig getilgt sind.

8.2 Wird von uns Ware zurückgenommen, gilt dies - im Falle einer Unanwendbarkeit des Verbraucherkreditgesetzes – nur dann als Rücktritt vom Vertrag, wenn wir dies ausdrücklich schriftlich bestätigen. Für uns erfolgte Pfändung von Ware bedeutet dagegen stets den Rücktritt vom Vertrag.

8.3 Über Pfändung und andere von dritten ausgehende Gefährdungen für unsere Rechte sind wir unverzüglich schriftlich mit allen Angaben zu unterrichten, die wir für eine Interventionsklage nach § 771 Zivilprozessordnung benötigen. Soweit wir Ausfall erleiden, weil ein Dritter die von ihm zu erstattenden gerichtlichen und außergerichtlichen Kosten einer Klage nach § 771 der Zivilprozessordnung nicht erbringen kann, haftet der Besteller.

8.4 Widerruflich darf die Ware weiterverarbeitet oder weiter veräußert werden. Bei Weiterverarbeitung oder Umbildung der Kaufsache gilt der Lieferer als Hersteller und erwirbt das Eigentum an den Zwischen- und Enderzeugnissen. Bei Verarbeitung der Kaufsache mit anderen, uns nicht gehörenden Gegenständen erwerben wir Miteigentum an der neuen Sache, im Verhältnis des Rechnungs-Endbetrages unserer Vorbehaltsware zum Anschaffungspreis der anderen verarbeitenden Waren (zu Zeit der Verarbeitung). Für die neue Sache gelten im übrigen die Regelungen zur Vorbehaltsware entsprechend. Bei untrennbarer Vermischung unserer Vorbehaltsware mit anderen Gegenständen steht uns das Miteigentum an der neuen Sache zu im Verhältnis des Rechnungswertes unserer Vorbehaltsware zum Anschaffungspreis der anderen vermischten Gegenstände (zur Zeit der Vermischung). Der Besteller verwahrt das Allein- oder Miteigentum für uns.

8.5 Der Besteller ist befugt, unsere Vorbehaltsware im ordnungsgemäßen Geschäftsbetrieb weiter zu veräußern. Sämtliche hieraus entstehenden Forderungen gegen Dritte tritt der Besteller hiermit im Voraus an uns ab, und zwar in Höhe des jeweiligen Rechnungs-Endbetrages (einschließlich Mehrwertsteuer). Ungeachtet dieser Abtretung bleibt der Besteller weiterhin zur Einziehung der Forderungen berechtigt. Auf Verlangen hat der Besteller uns die abgetretenen Forderungen nebst deren Schuldnern bekanntzugeben und uns alle für eine Forderungseinziehung benötigten Angaben und Unterlagen zur Verfügung zu stellen. Auf unser besonderes Verlangen macht der Besteller den betreffenden Drittschuldnern Mitteilung von der Abtretung an uns.

8.6 Vorstehende Abtretung zur Sicherheit unserer Forderungen umfaßt auch solche Forderungen, die der Besteller gegen einen Dritten infolge einer Verbindung unserer Vorbehaltsware mit einem Grundstück erwirbt. Die Abtretungsregelung gilt auch für verarbeitete, umgebildete und vermischte Vorbehaltsware.

8.7 Wir verpflichten uns, auf Verlangen des Bestellers Sicherheiten, die er uns nach diesem Vertrag zur Verfügung gestellt hat, freizugeben, soweit sie zur Sicherung unserer Forderungen nicht nur vorübergehend nicht mehr benötigt werden, insbesondere soweit sie den Wert unserer zu sichernden und noch nicht getilgten Forderungen um mehr als 20% übersteigen.

## 9. Gerichtsstand – Erfüllungsort

9.1 Ausschließlicher Gerichtsstand für sämtliche sich zwischen den Parteien aus dem Vertragsverhältnis ergebenden Streitigkeiten ist, soweit es sich bei dem Besteller um einen Vollkaufmann, eine juristische Person des öffentlichen Rechts oder öffentlich rechtliches Sondervermögen handelt, nach unserer Wahl unser Geschäftssitz oder der Erfüllungsort.